Sealco
Sealco
Sealco
Sealco
Sealco
Sealco
Sealco
Sealco
Sealco
Sealco
Sealco
Sealco
Sealco
Sealco
Sealco
Sealco

SEALCO

Commercial Vehicle Products

Product Catalog 2004

ANOTHER "REPEAT ACCOUNT!"

Over 100 SEALCO Air-Brake Relay Emergency Valves are now installed in the big, powerful Asbury fleet.

ASBURY TRANSPORTATION CO.
4906 SOUTH ALAMEDA STREET
LOS ANGELES, CALIF.

Mr. Homer T. Seale, President
HOMER T. SEALE, INC.
5330 Alhambra Ave.
Los Angeles 32, Calif.

Dear Mr. Seale:

We thought you would like to know that through actual experience we have found SEALCO RELAY EMERGENCY VALVES operate in a very satisfactory manner.

In our operations, meeting all types of conditions both road and weather, it is only natural that safe, efficient braking is of utmost importance to this company.

Very truly yours,
ASBURY TRANSPORTATION COMPANY

A. J. Eyraud
Vice-President and General Manager

SEALCO

AIR-BRAKE RELAY EMERGENCY VALVES

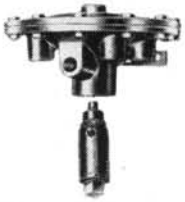

SEALCO
DEPENDABLE
AIR-BRAKE EQUIPMENT

HOMER T. SEALE, INC.
5330 ALHAMBRA AVENUE • LOS ANGELES • CALIFORNIA

Proved by millions of miles

This Advertisement appears in the June 1949 Issue of Commercial Car Journal

Sealco Commercial Vehicle Products

215 East Watkins Street ~ Phoenix, Arizona 85004 ~ Phone 602/253-1007 ~ Fax 800/222-2334

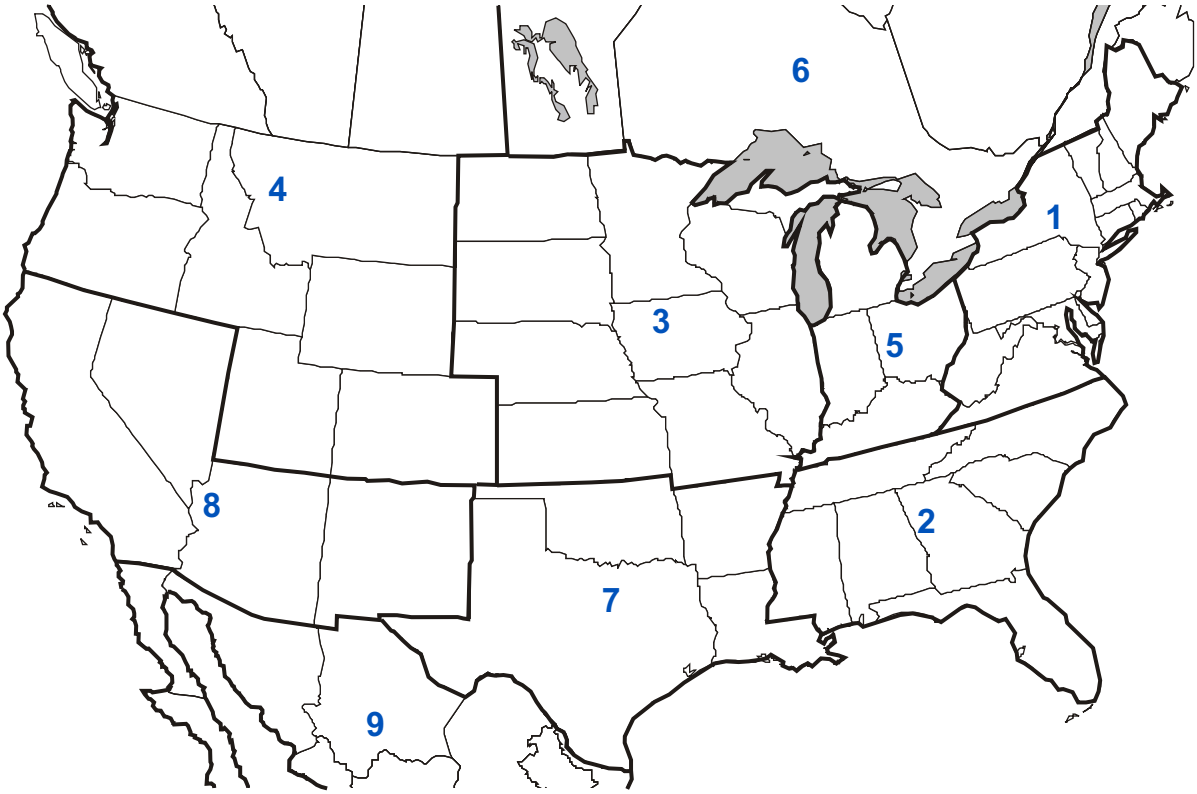

1 **JACK TAYLOR** - CT, DE, ME, MD,
MA, NH, NJ, NY, PA, RI, VT, VA, WV
Office (610) 296-3611
Mobil (602) 418-7229

2 **DARRYL LOVELL** - AL, FL,
MS, GA, NC, SC, TN
Office (770) 992-9837
Mobil (602) 418-7225

3 **RICHARD STUMPF** - IL, IA,
KS, MN, MO, ND, NE, SD, WI
Office (630) 986-8531
Mobil (602) 418-7228

4 **KEVIN ROBERTS** - AB, AK, BC,
ID, MT, OR, SK, UT, WA, WY, YT
Office (360) 993-2138
Mobil (602) 315-7281

5 **VITO CAVATAIO** - IN, KY, MI, OH
Office (313) 885-8884
Mobil (602) 418-7222

6 **RICHARD SKALSKI** - MB, NB, NF, NS, ON, PQ
Office (905) 878-2021
Mobil (416) 930-0690 Pager (888) 649-9238

7 **KEN ROAN** - AR, LA, OK, TX
Office (817) 281-4718
Mobil (602) 418-7224

8 **GILBERT ARIAS** - AZ, CA, CO, HI, NM, NV, UT
Office (909) 861-8163
Mobil (602) 418-7221

9 **ALEJANDRO ESCAMILLA** - Mexico
Office 011-5281-8317-3397
Mobil 011-5281-8253-8902

RELAY EMERGENCY VALVES

Relay Emergency Valves – Charging (4 Delivery Ports)

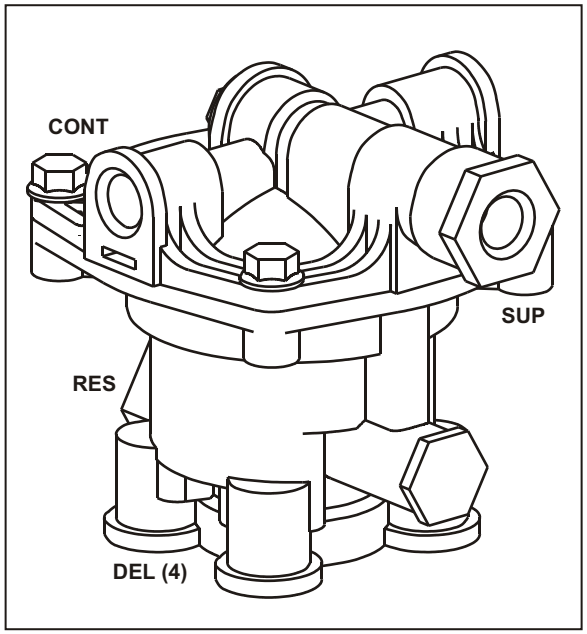

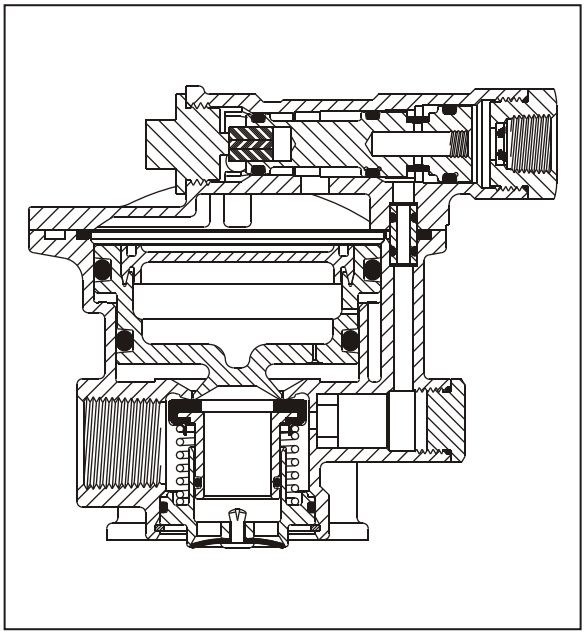

- The Ratio Feature is considered a benefit in hard stop situations & refers to the relationship between the control air pressure to the valve & the delivered air pressure from the valve to the service brake chambers. During normal stopping a 1:1 ratio exists between the control & delivered air pressures. In a hard stop the ratio momentarily changes to 1:1.5 until valve lap-off occurs & the 1:1 ratio is restored. This change takes place in less then 1/100th of a second.
- Do not use ratio feature valves on converter dollies or trailer turnable axles
- Mounting Hardware on pages 61 & 62
- Piping examples on page 69
- **PLUG UNIT ASSEMBLY 110143**
- **MAJOR REPAIR KIT 110201**
- **SPOOL ASSEMBLY 110162**
- **MINOR SPOOL KIT 110166**

* No Plug Unit available for this part number

PART NUMBER	PORT SIZES (NPT)					RATIO FEATURE	NOMINAL CRACK PRESSURE
	Supply	Control	Reservoir	Delivery	Sup. Out		
110200	1/4"	1/4"	3/4"	3/8"	-	Yes	4.5 psi
110205	3/8"	3/8"	3/4"	3/8"	-	Yes	4.5 psi
110459 *	3/8"	3/8"	3/4"	3/8"	3/8"	No	8.5 psi
110460	1/4"	1/4"	3/4"	3/8"	-	No	4.5 psi
110470	3/8"	3/8"	3/4"	3/8"	-	No	4.5 psi
110475	3/8"	3/8"	3/4"	3/8"	3/8"	No	4.5 psi

RELAY EMERGENCY VALVES

Relay Emergency Valve – Non-Charging (4 Delivery Ports)

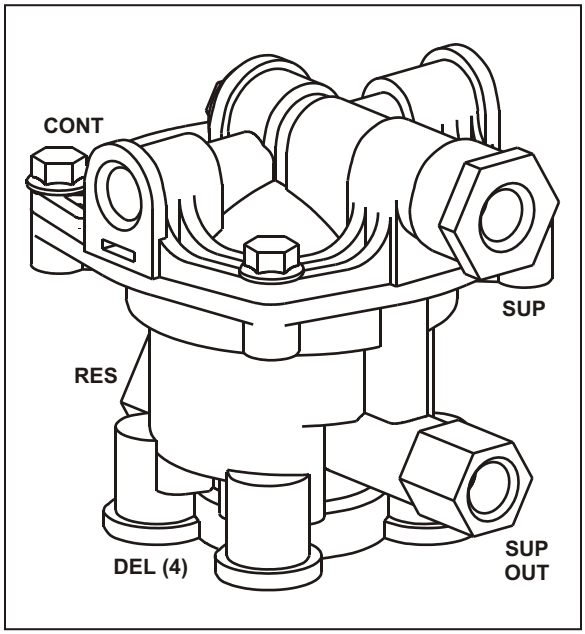

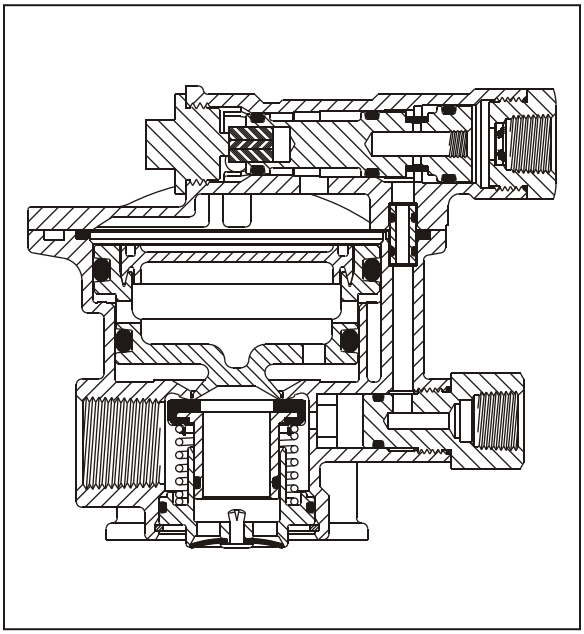

INFORMATION:

- Complies with all changes to FMVSS 121, Docket 90-3 effective 10-8-92
- Commonly used on converter dollies, turnable axles, heavy haulers, ag trailers and air lift axles with service brake chambers
- Commonly used in conjunction with 110257 Emergency Brake Pressure Protection Valve
- No ratio feature included
- Mounting Hardware on pages 61 & 62
- Piping examples on page 73
- **PLUG UNIT ASSEMBLY 110143**
- **MAJOR REPAIR KIT 110359**
- **SPOOL ASSEMBLY 110162**
- **MINOR SPOOL KIT 110166**

PART NUMBER	PORT SIZES (NPT)					NOMINAL CRACK PRESSURE
	Supply	Control	Reservoir	Delivery	Sup. Out	
110338	3/8"	3/8"	3/4"	3/8"	3/8"	4.5 psi

RELAY EMERGENCY VALVES
Emergency Control Valve

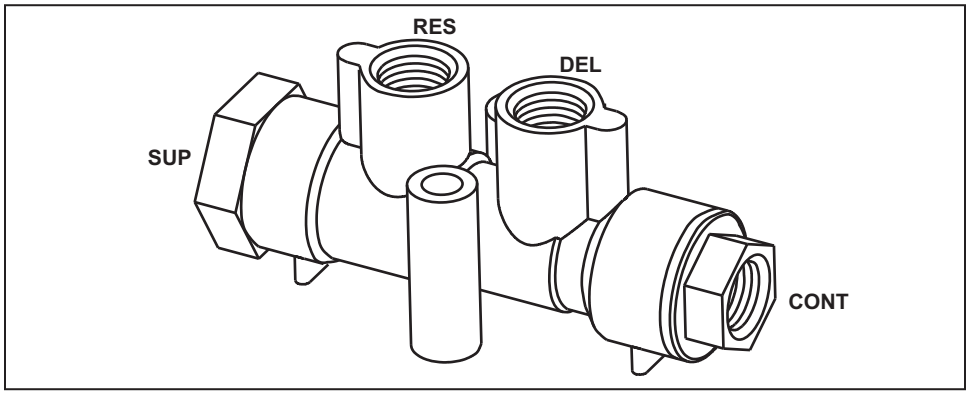

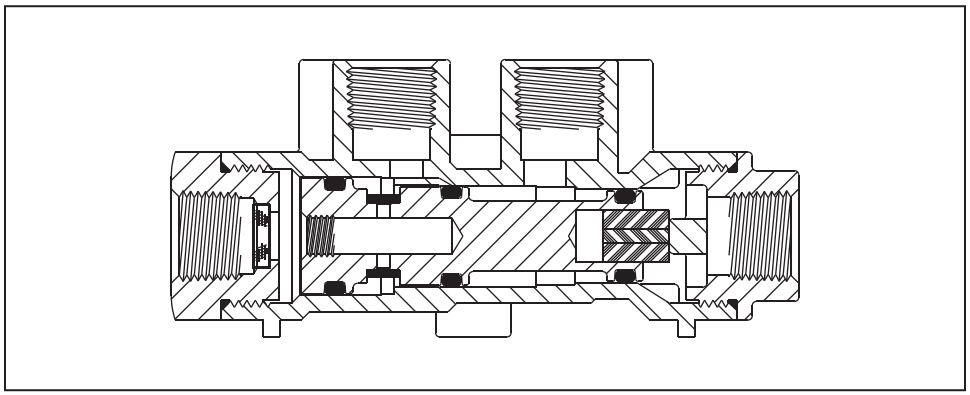

INFORMATION:

- Commonly used on converter dollies
- Commonly used on trailer turnable axles & trailers exempt from spring brakes
- Always used in conjunction with 110257 Emergency Brake Pressure Protection Valve
- **SPOOL ASSEMBLY 110162**
- **MINOR SPOOL KIT 110166**

Single Axle Dolly Non-Charging System

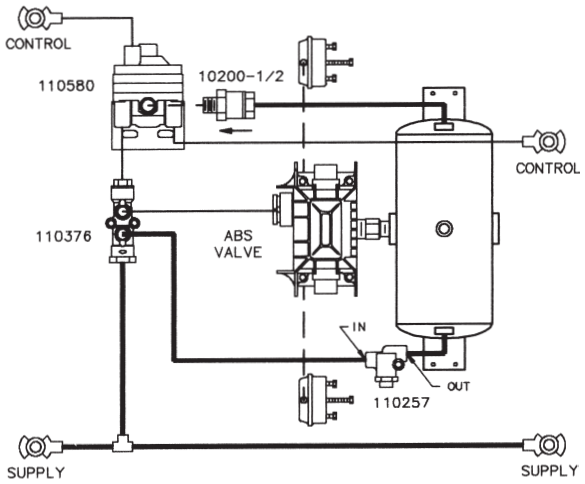

PART NUMBER	PORT SIZES (NPT)			
	Supply	Control	Reservoir	Delivery
110376	3/8"	3/8"	3/8"	3/8"

RELAY EMERGENCY VALVES

Relay Emergency Valve – Pre FMVSS 121 (4 Delivery Ports)

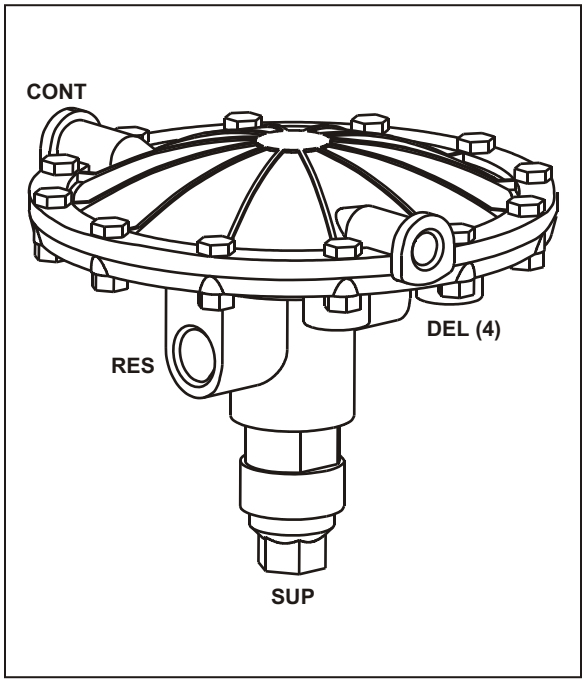

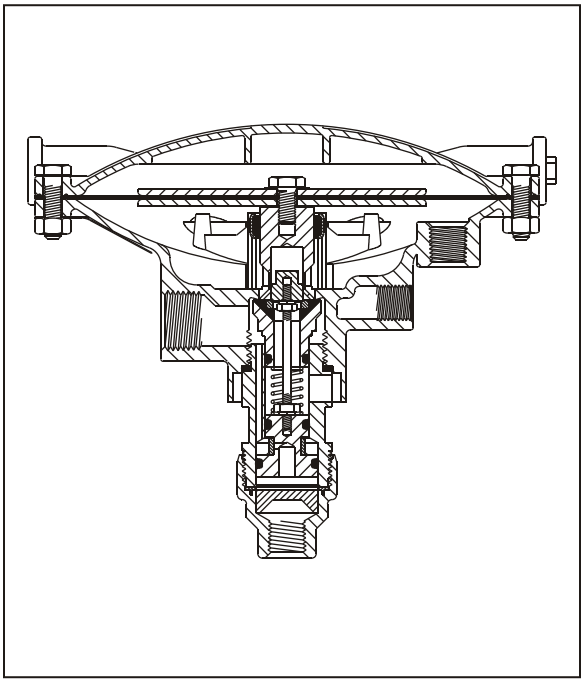

INFORMATION:

- Used only on brake systems prior to the implementation of FMVSS 121
- Mounting Hardware on pages 61 & 62
- **CARTRIDGE 1000-5A**
- **REPAIR KIT 10-5**

1000-5A Cartridge

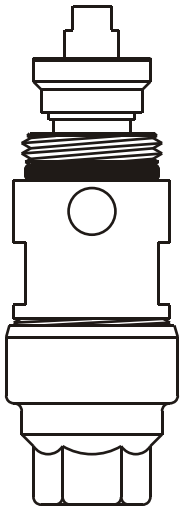

PART NUMBER	PORT SIZES (NPT)				NOMINAL CRACK PRESSURE
	Supply	Control	Reservoir	Delivery	
A1000S	1/4"	1/4"	1/2"	1/4"	1.5 psi

SERVICE RELAY VALVES

Service Relay Valves (4 Delivery Ports)

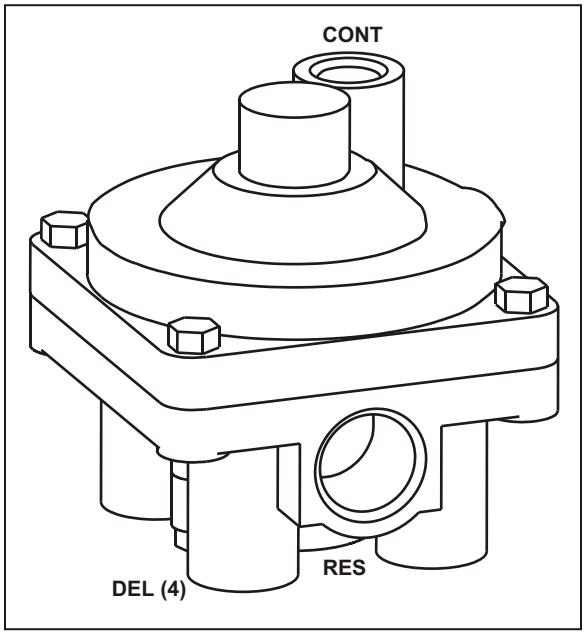

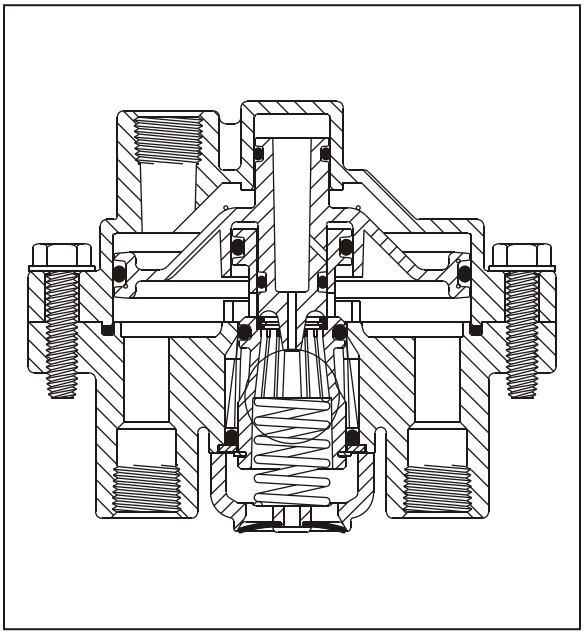

INFORMATION:

- Nipple mounted 110380 & 110415 are used primarily for tandem axle trailer service brakes with four brake chambers
- 110385 may be used as a frame mounted version of 110380
- 110416 & 110448 commonly used as a tractor, straight truck or trailer Service Relay Valve
- Mounting Hardware on pages 61 & 62
- No Plug Units or Repair Kits available

PART NUMBER	PORT SIZES (NPT)			NOMINAL CRACK PRESSURE	MOUNTING INFORMATION
	Control	Reservoir	Delivery		
110380	3/8"	3/4"	3/8"	1.5 psi	Use 6003 or 6006 nipple
110385	3/8"	3/4"	3/8"	1.5 psi	Frame Bracket Kit 110395 included
110415	3/8"	3/4"	3/8"	4.0 psi	Use 6003 or 6006 nipple
110416	3/8"	3/4"	3/8"	4.0 psi	Frame Bracket Kit 110395 included
110488	3/8"	3/4"	3/8"	5.5 psi	Use 6003 or 6006 nipple
110615	3/8"	3/4"	3/8"	4.0 psi	Use 4 - #2030 screws

SERVICE RELAY VALVES

Service Relay Valves (4 Delivery Ports)

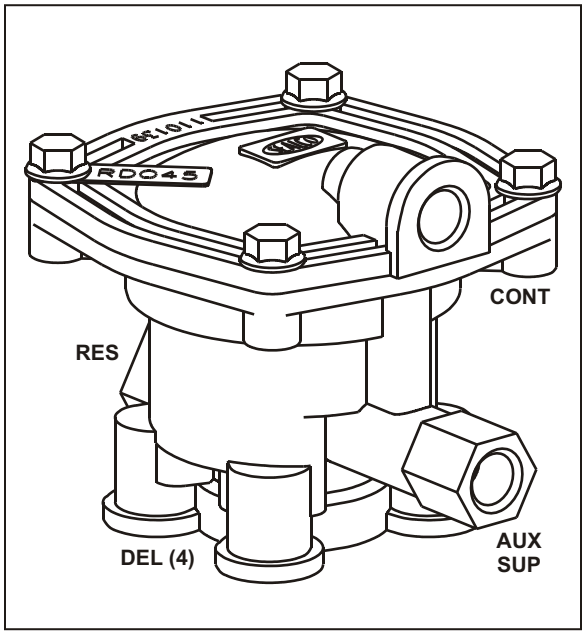

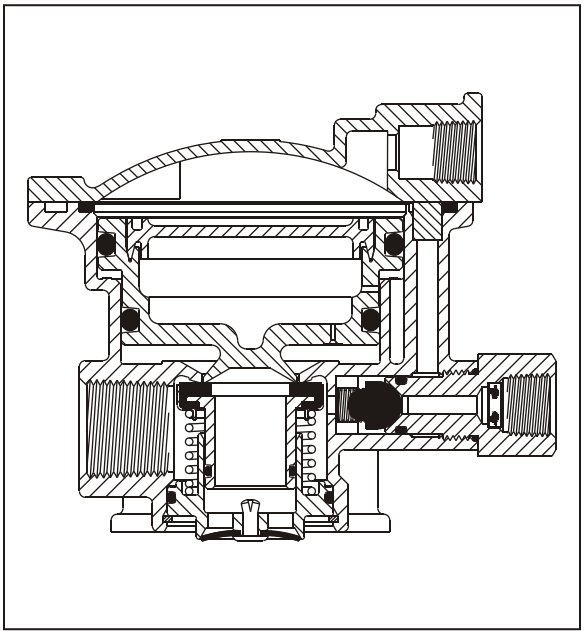

INFORMATION:

- The Ratio Feature is considered a benefit in hard stop situations & refers to the relationship between the control air pressure to the valve & the delivered air pressure from the valve to the service brake chambers. During normal stopping a 1:1 ratio exists between the control & delivered air pressures. In a hard stop the ratio momentarily changes to 1:1.5 until valve lap-off occurs & the 1:1 ratio is restored. This change takes place in less then 1/100th of a second.
- Do not use ratio feature valves on converter dollies, trailer turnable axles or lift axles
- Mounting Hardware on pages 61 & 62
- Piping examples on page 74
- **PLUG UNIT ASSEMBLIES 110143 & 110583**
- **MINOR PLUG UNIT KIT 110005**
- **MAJOR REPAIR KIT 110118**
- **AUXILARY SUPPLY PORT REPAIR KIT 110673**

PART NUMBER	PORT SIZES (NPT)				RATIO FEATURE	NOMINAL CRACK PRESSURE	PLUG UNIT
	Auxiliary Supply	Control	Reservoir	Delivery			
110139	3/8"	3/8"	3/4"	3/8"	Yes	4.5 psi	110143
110450	3/8"	3/8"	3/4"	3/8"	No	4.5 psi	110143
110575	3/8"	3/8"	3/4"	3/8"	Yes	8.5 psi	n/a
110584	3/8"	3/8"	3/4"	3/8"	Yes	5.5 psi	110583
110600	Capped	3/8"	3/4"	3/8"	Yes	4.5 psi	110143

SERVICE RELAY VALVES

Service Relay Valves (3 Delivery Ports)

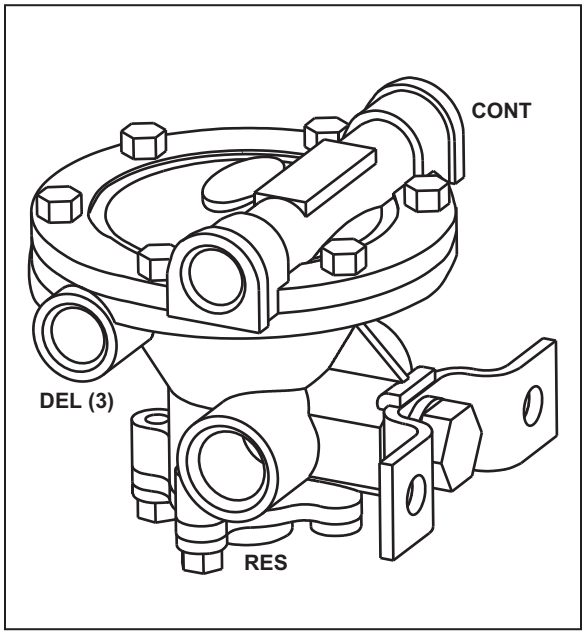

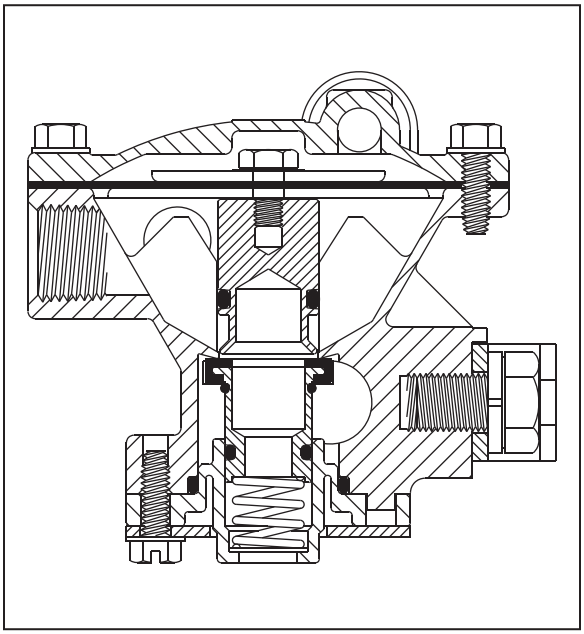

INFORMATION:

- Commonly used as a tractor or straight truck Relay Valve
- Part number 9125 replaces both part numbers 9125 1/4 and 9125 3/8
- Part number 110228 replaces part number 110155
- **PLUG UNIT ASSEMBLY 9125-5**
- **REPAIR KIT 912-5**

PART NUMBER	PORT SIZES (NPT)			NOMINAL CRACK PRESSURE	MOUNTING KIT INCLUDED
	Control (2)	Reservoir (2)	Delivery (3)		
9125	1/4"	1/2"	3/8" (2) 1/2" (1)	5.5 psi	110237
110207	3/8"	1/2"	3/8" (2) 1/2" (1)	5.5 psi	110237
110228	3/8"	1/2"	3/8" (2) 1/2" (1)	5.5 psi	110156

SERVICE RELAY VALVES

Service Relay Valves (2 Delivery Ports)

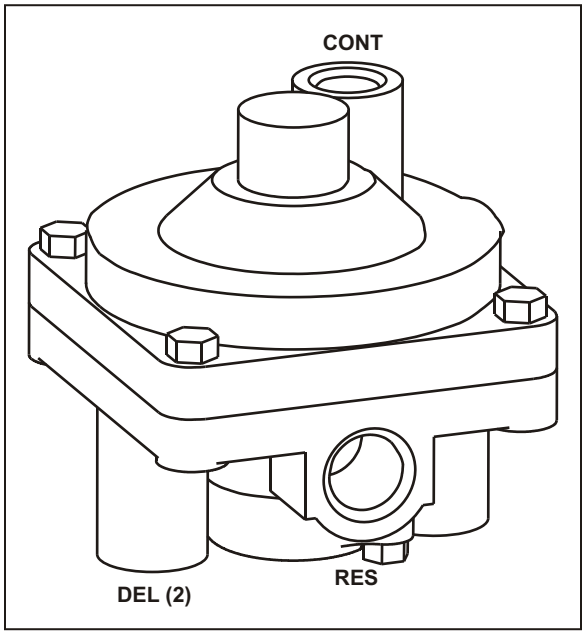

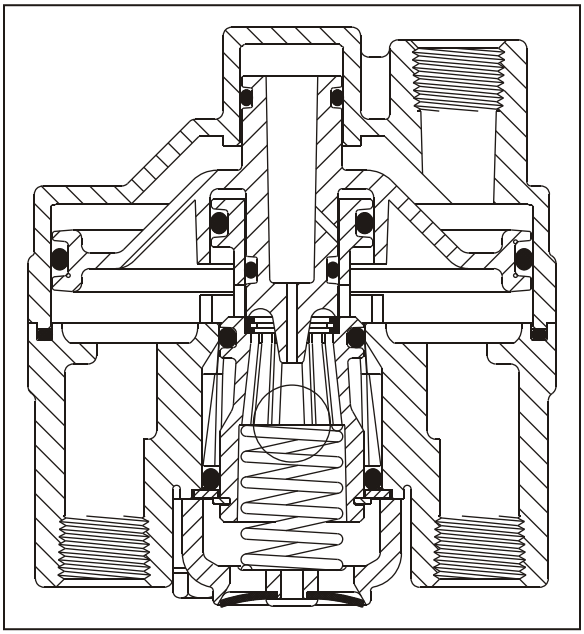

INFORMATION:

- Nipple mounted 110360 & 110410 are used primarily for single axle trailer service brakes or tandem axle by axle trailer brake designs
- 110365 may be used as a frame mounted version of 110360 or as a Control Line Valve to replace 110463 or 110464
- 110412 & 110487 may be used as a tractor, straight truck or trailer Service Relay Valve
- Mounting Hardware on pages 61 & 62
- Piping examples on page 74
- No Plug Units or Repair Kits available

PART NUMBER	PORT SIZES (NPT)			NOMINAL CRACK PRESSURE	MOUNTING INFORMATION
	Control	Reservoir	Delivery		
110360	3/8"	1/2"	3/8"	1.5 psi	Use 6002 or 6003 nipple
110365	3/8"	1/2"	3/8"	1.5 psi	Frame Bracket Kit 110485 included
110410	3/8"	1/2"	3/8"	4.0 psi	Use 6002 or 6003 nipple
110412	3/8"	1/2"	3/8"	4.0 psi	Frame Bracket Kit 110485 included
110487	3/8"	1/2"	3/8"	5.5 psi	Use 6002 or 6003 nipple

SERVICE RELAY VALVES

Service Relay Valves (2 Delivery Ports)

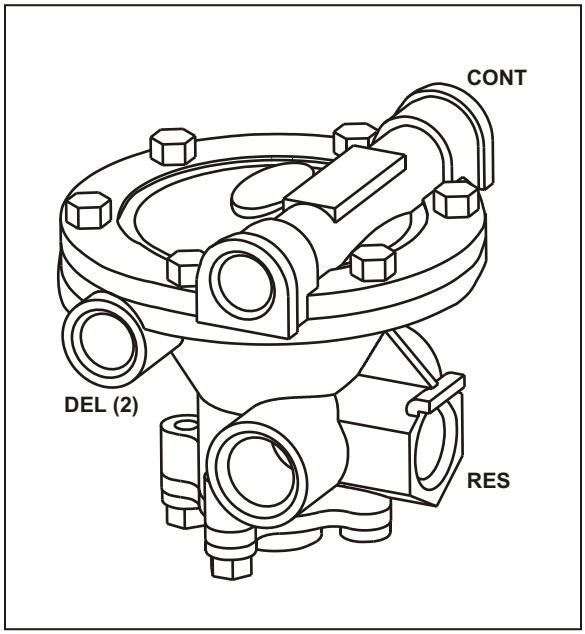

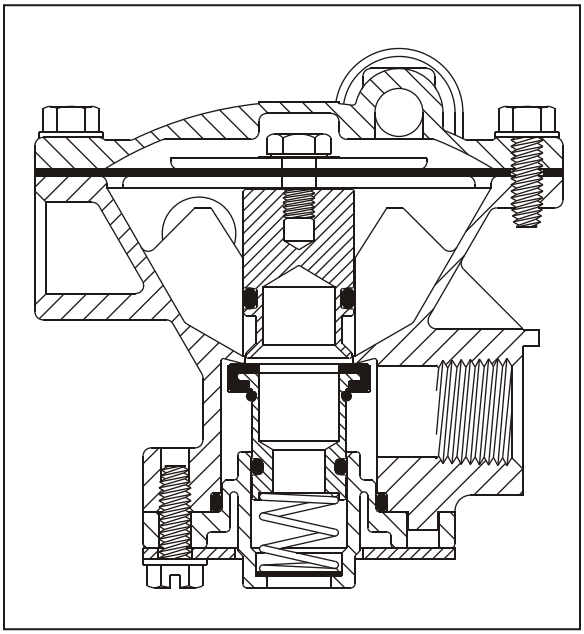

INFORMATION:

- Used primarily for single axle trailer service brakes or tandem axle by axle trailer brake designs
- Mounting Hardware on pages 61 & 62
- Piping examples on page 72
- **PLUG UNIT ASSEMBLY 110227 (No plug unit available for 110507)**
- **REPAIR KIT 912-5**

PART NUMBER	PORT SIZES (NPT)			NOMINAL CRACK PRESSURE	MOUNTING INFORMATION
	Control (2)	Reservoir	Delivery		
110197	3/8"	1/2"	3/8"	4.0 psi	Use 6002 or 6003 nipple
110198	3/8"	1/2"	3/8"	4.0 psi	6002 nipple included
110199	3/8"	1/2"	3/8"	4.0 psi	6003 nipple included
110275	3/8"	1/2"	3/8"	4.0 psi	Frame Bracket Kit 110237 included
110507	3/8"	1/2"	3/8"	6.0 psi	Use 6002 or 6003 nipple

RELAY & SPRING BRAKE VALVES

RSA Valves (Relay & Spring Brake Valve Assembly)

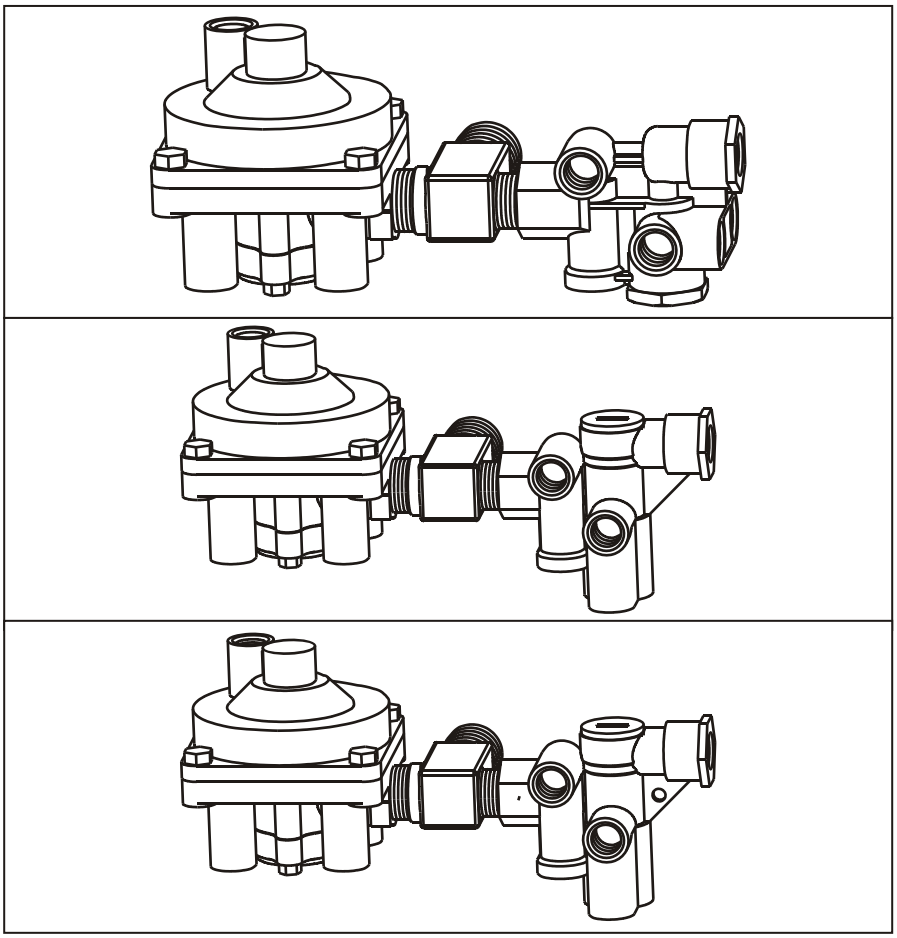

INFORMATION:

- Replaces Haldex / Midland Full Function Valves FFV & FF2
- Uses 110415 4-port Service Relay Valve & allows for choice of Service Reservoir Priority with 110700 SBCV or Spring Brake Priority with either 110500 or 110800 SBCV
- Allows for future repair or replacement of individual Relay Valve or Spring Brake Control Valve instead of having to replace the entire Full Function Valve
- Relay Valve & Spring Brake Control Valve come assembled on heavy duty brass tee with vibraseal

PART NUMBER	SYSTEM PRIORITY	VALVES MOUNTED ON BRACKET		NOMINAL CRACK PRESSURE	TANK PORT MOUNTING SIZE
		Relay Valve	Spring Brake Cont.		
110542	Spring Brake	110415	110500	4.0 psi	1/2" NPT
110544	Spring Brake	110415	110500	4.0 psi	3/4" NPT
110742	Service Reservoir	110415	110700	4.0 psi	1/2“ NPT
110744	Service Reservoir	110415	110700	4.0 psi	3/4" NPT
110842	Spring Brake	110415	110800	4.0 psi	1/2" NPT
110844	Spring Brake	110415	110800	4.0 psi	3/4" NPT

Spring Brake Control Valves – Spring Brake Priority

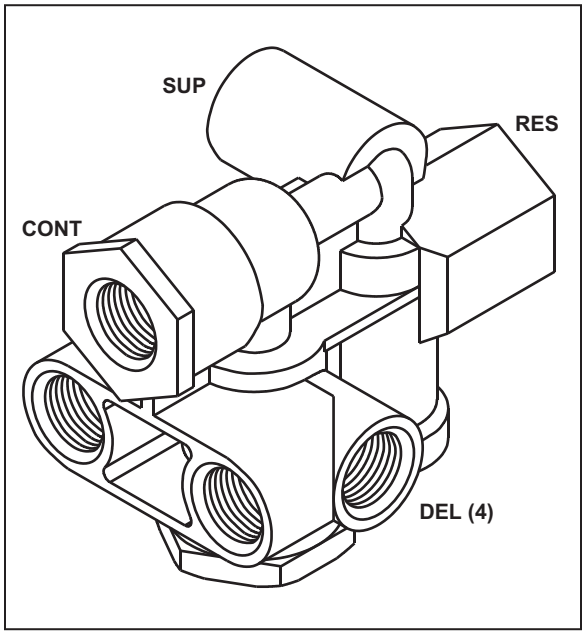

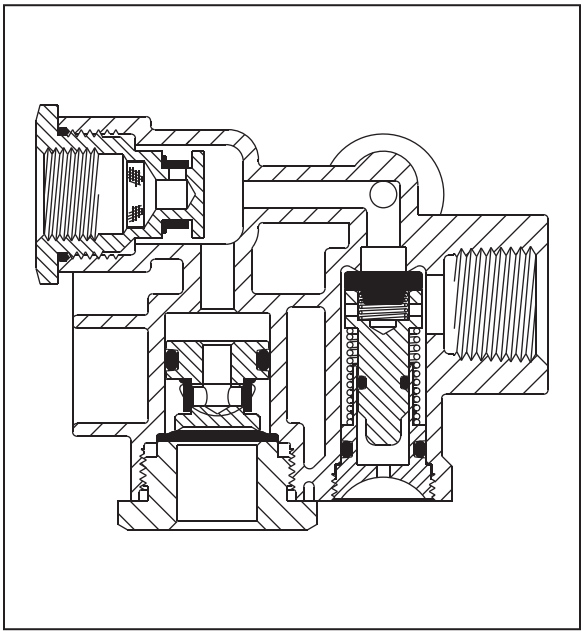

INFORMATION:

- The spring brake priority immediately provides supply air to release the spring brakes, the internal Pressure Protection Valve opens to also fill the reservoir at approximately 80 psi
- Complies with all changes to FMVSS 121, Docket 90-3 effective October 8, 1992
- Designed for use with a single reservoir on a typical single or tandem axle trailer
- May also be used with two 1,400 cubic inch (nominal) reservoirs on tandem axle trailers
- Mounting Hardware on pages 61 & 62
- Piping examples on pages 71, 72, 74, 75 & 76
- **PLUG UNIT ASSEMBLY 110515** for pressure protection
- **PLUG UNIT ASSEMBLY 110520** for movable seat
- **REPAIR KIT 110501**

PART NUMBER	PORT SIZES (NPT)				COMMENTS
	Supply	Control	Reservoir	Delivery (4)	
110500	3/8"	3/8"	1/2"	3/8"	None
110505	3/8"	3/8"	1/2"	3/8"	Delivery Back Ports B plugged
110510	3/8"	3/8"	1/2"	3/8"	Delivery Side Ports A plugged

SPRING BRAKE CONTROL VALVES

Spring Brake Control Valve – Spring Brake Priority

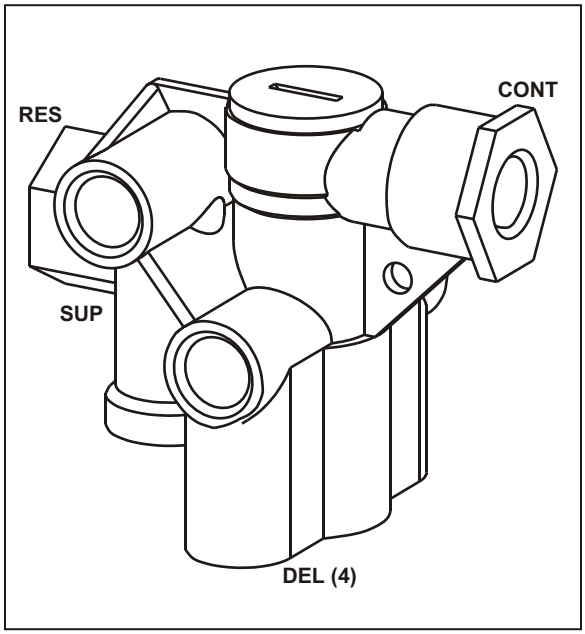

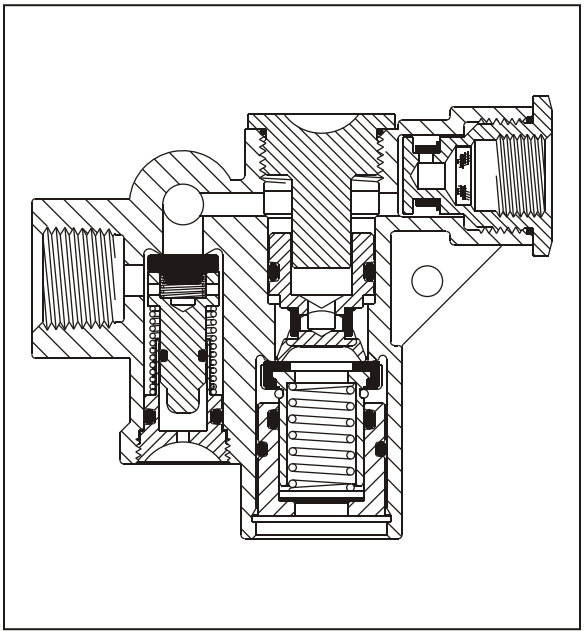

INFORMATION:

- The spring brake priority immediately provides supply air to release the spring brakes, the internal Pressure Protection Valve opens to also fill the reservoir at approximately 80 psi
- Also supplies air to release the spring brakes from the trailer air reservoir when available for faster release times
- Complies with all changes to FMVSS 121, Docket 90-3 effective October 8, 1992
- Designed for use with a single reservoir on a typical single or tandem axle trailer
- May also be used with two 1,400 cubic inch (nominal) reservoirs on tandem axle trailers
- Direct replacement for Bendix's SR-5 spring brake control valve
- Mounting Hardware on pages 61 & 62
- Piping examples on pages 71, 72, 74, 75 & 76
- Conversion from Bendix SR-5 on page 77
- **PLUG UNIT ASSEMBLY 110705** for movable seat
- **PLUG UNIT ASSEMBLY 110515** for pressure protection

PART NUMBER	PORT SIZES (NPT)			
	Supply	Control	Reservoir	Delivery (4)
110800	3/8"	3/8"	1/2"	3/8"

Spring Brake Control Valve – Service Reservoir Priority

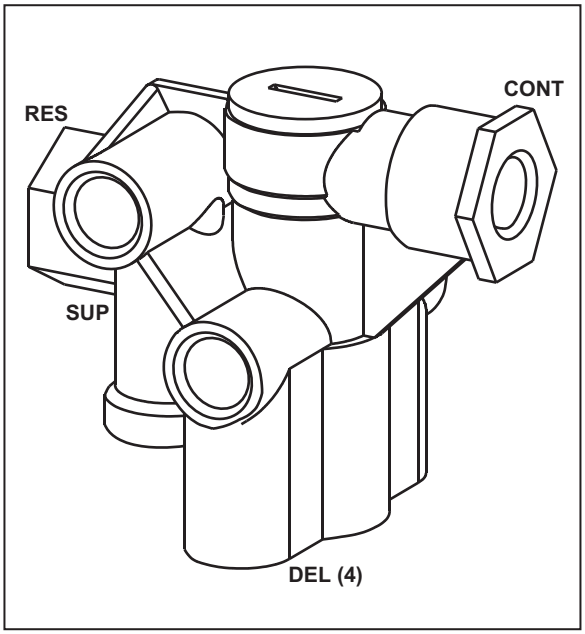

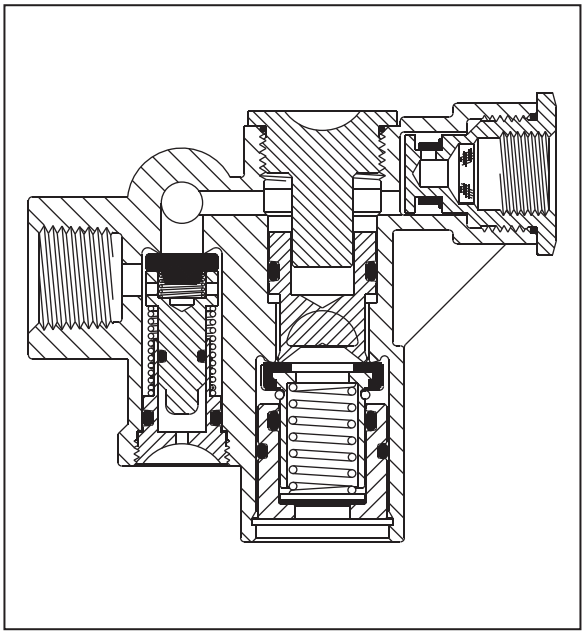

INFORMATION:

- The service reservoir priority provides supply air to simultaneously fill the reservoir & release the spring brakes after the internal Pressure Protection Valve opens at approximately 80 psi
- Complies with all changes to FMVSS 121, Docket 90-3 effective October 8, 1992
- Designed for use with a single reservoir on a typical single or tandem axle trailer
- May also be used with two 1,400 cubic inch (nominal) reservoirs on tandem axle trailers
- Mounting Hardware on pages 61 & 62
- Piping examples on pages 71, 72, 74, 75 & 76
- **PLUG UNIT ASSEMBLY 110705** for movable seat
- **PLUG UNIT ASSEMBLY 110515** for pressure protection

PART NUMBER	PORT SIZES (NPT)			
	Supply	Control	Reservoir	Delivery (4)
110700	3/8"	3/8"	1/2"	3/8"

Spring Brake Control Valves – Protected Reservoir System

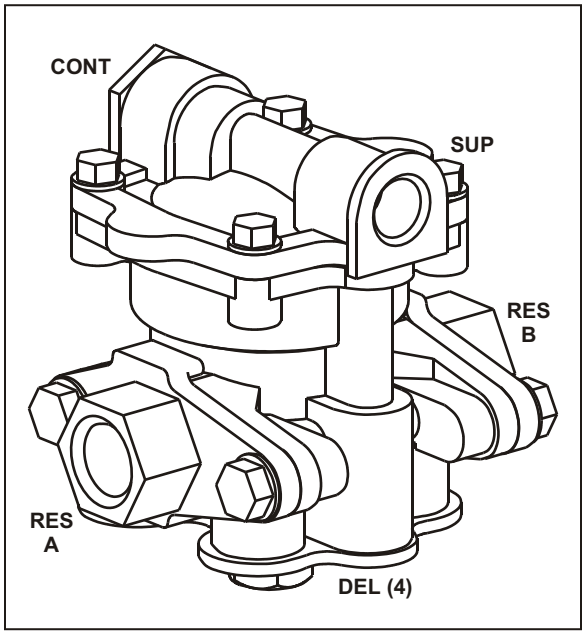

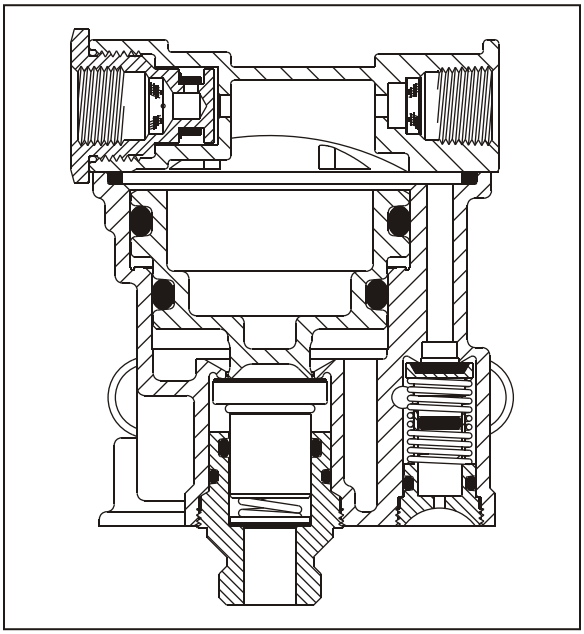

INFORMATION:

- The protected reservoir system is used on trailers with two reservoirs & allows air to be supplied from second reservoir in the event of a single leakage failure
- Complies with FMVSS 121 regulations including Docket 90-3 effective October 8, 1992
- Mounting Hardware on pages 61 & 62 • Piping examples on pages 70, 71, 72 & 74
- **PLUG UNIT ASSEMBLY 110175** for pre - 10/92 trailers
- **PLUG UNIT ASSEMBLY 110609** for post - 10/92 trailers
- **MAJOR REPAIR KIT 110185** • **MINOR REPAIR KIT 110195**

PART NUMBER	PORT SIZES (NPT)					COVER ROTATE	COVER PICTURE
	Supply	Control	Reservoir A	Reservoir B	Delivery (4)		
110170	3/8"	3/8"	1/2"	1/2"	3/8"	None	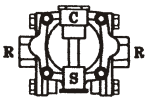
110171	3/8"	3/8"	1/2"	3/8"	3/8"	90°	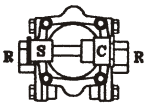
110191	3/8"	3/8"	3/8"	1/2"	3/8"	90°	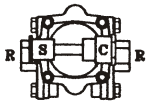
110310	3/8"	3/8"	3/8"	1/2"	3/8"	None	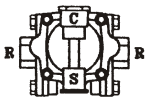
110315	3/8"	3/8"	1/2"	3/8"	3/8"	None	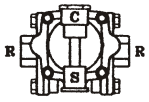

CONTROL LINE VALVES

Control Line Valves – Dollies & Turnable Axles

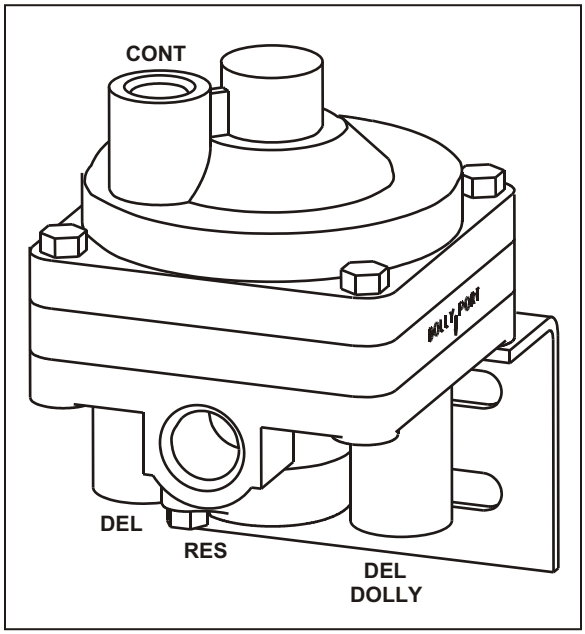

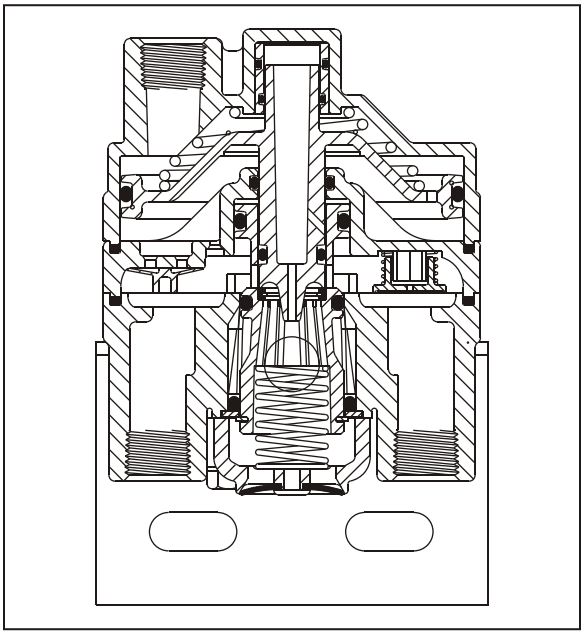

INFORMATION:

- Complies with all changes to FMVSS 121, Docket 85-07, Notice 7
- Primarily used on dollies & turnable axles on pull, transfer & B-train type trailers
- The dolly port of the Control Line valve is plumbed to the Relay Emergency Valve or ABS ECU to control the service brakes
- Provides a balanced control line signal for uniform braking of multi-axle combination vehicles
- Prevents premature braking of the steerable axle(s) in combination vehicles for maximum lateral stability while stopping.
- Improves the release of service brakes in the tractor/trailer combination eliminating trailer brake drag complaints
- Mounting Hardware on pages 61 & 62
- Piping examples on page 73

PART NUMBER	PORT SIZES (NPT)				NOMINAL CRACK PRESSURE	COMMENTS
	Control	Reservoir	Dolly	Delivery		
110570	3/8"	1/2"	3/8"	3/8"	0.0 psi	Includes Bracket as shown
110571	3/8"	1/2"	3/8"	3/8"	0.0 psi	Includes Bracket reversed
110690	3/8"	1/2"	3/8"	3/8"	0.0 psi	110570 without Bracket
110606	3/8"	1/2"	3/8"	3/8"	0.0 psi	110690 w/ 10200 ½ Check Valve

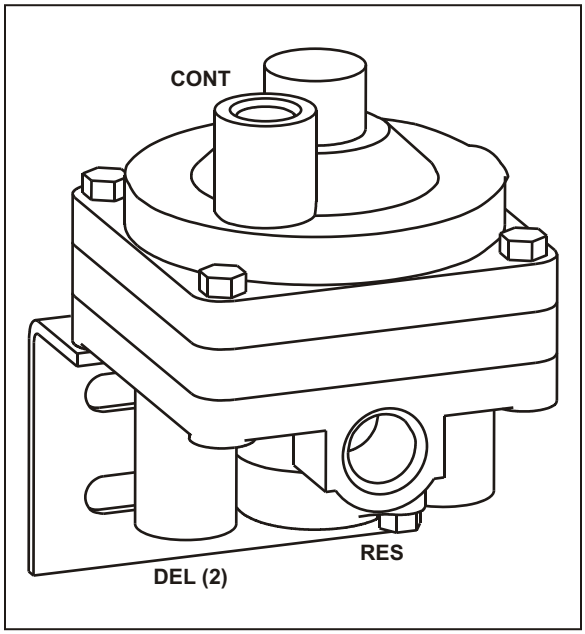

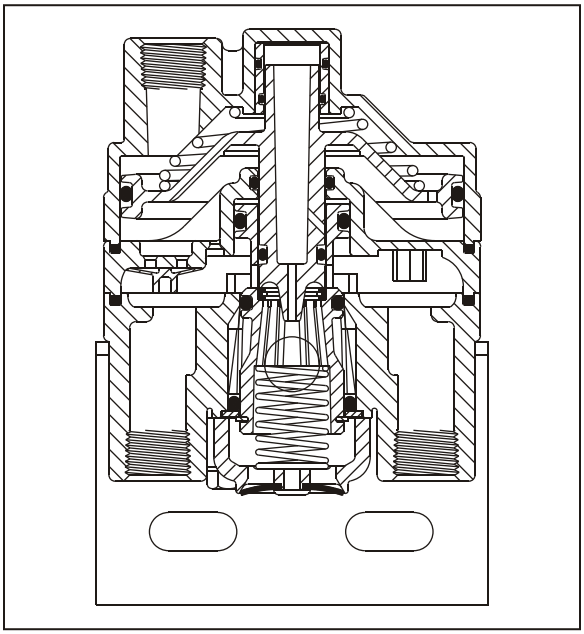

INFORMATION:

- Complies with all changes to FMVSS 121, Docket 85-07, Notice 7
- Primarily used on trailers designed to tow another trailer, long wheel base sliding tandems & specialty trailers with multiple axles
- Provides a balanced control line signal for uniform braking of multi-axle combination vehicles
- Improves application timing of service brakes in rearmost axles of long wheel base tractor/trailer combinations
- Improves the release of service brakes in the tractor/trailer combination eliminating trailer brake drag complaints.
- Mounting Hardware on pages 61 & 62
- Piping examples on page 72

PART NUMBER	PORT SIZES (NPT)			NOMINAL CRACK PRESSURE	COMMENTS
	Control	Reservoir	Delivery (2)		
110580	3/8"	1/2"	3/8"	0.0 psi	Includes Bracket as shown
110582	3/8"	1/2"	3/8"	0.0 psi	110580 with Bracket on top
110588	3/8"	1/2"	3/8"	0.0 psi	110580 with Bracket at 90° down
110605	3/8"	1/2"	3/8"	0.0 psi	110580 with 10200 ½ Check Valve
110790	3/8"	1/2"	3/8"	0.0 psi	110580 without Bracket

CONTROL LINE VALVES
Control Line Valve – Trailers

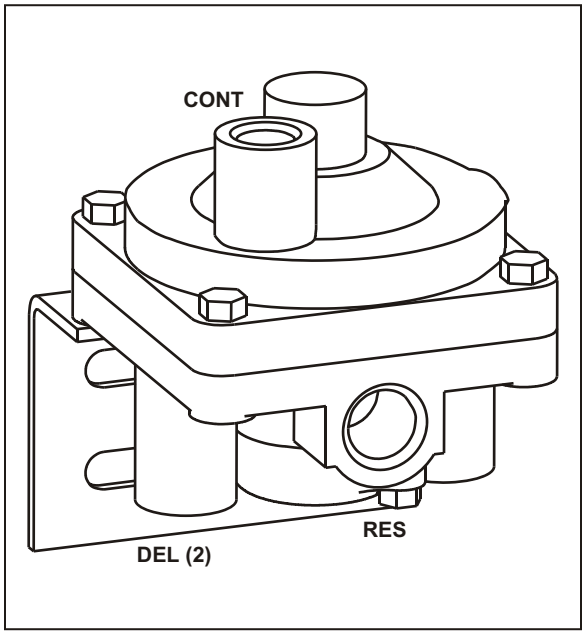

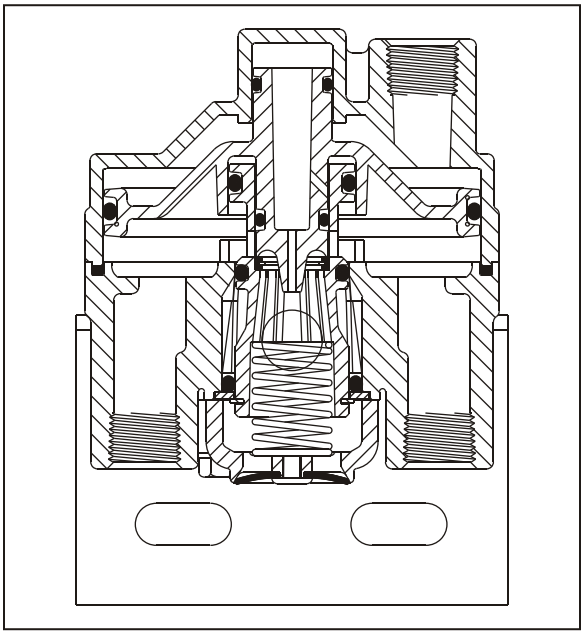

INFORMATION:

- Complies with brake timing changes in FMVSS 121, Docket 85-07, Notice 4 from May 1991 to August 1993
- Primarily used on trailers with long wheel base sliding tandems & trailers not designed to tow another trailer for improved application and release timing
- Plug all unused ports
- Can be replaced by Sealco 110580

PART NUMBER	PORT SIZES (NPTF)			NOMINAL CRACK PRESSURE	COMMENTS
	Control	Reservoir	Delivery (2)		
110365	3/8"	1/2"	3/8"	1.5 psi	Includes Bracket as shown

CONTROL LINE VALVES
Control Line Valve (Mini Valve) – Dollies

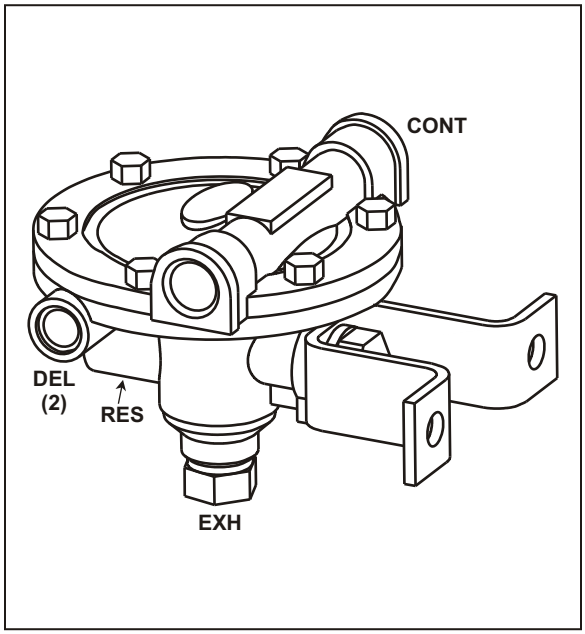

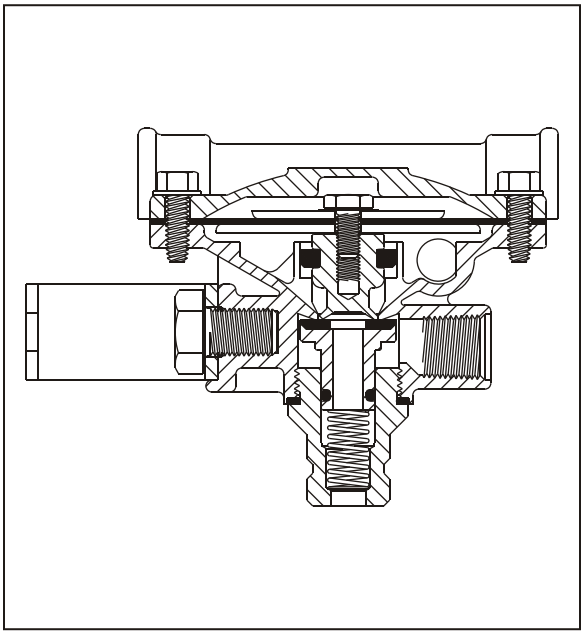

INFORMATION:

- Early version control line valve used primarily on dollies
- Complies with brake timing changes in FMVSS 121, Docket 85-07, Notice 4 from May 1991 to August 1993
- Improves application and release of brakes on dollies and rearmost trailer axles in double and triple trailer combinations.
- Plug all unused ports
- Can be replaced by Sealco 110570 or 110580
- **PLUG UNIT ASSEMBLY 3100-5**
- **RUBBER REPAIR KIT 31-5**

PART NUMBER	PORT SIZES (NPT)			NOMINAL CRACK PRESSURE
	Control	Reservoir	Delivery (2)	
3100	1/4"	3/8"	1/4"	2.5 psi

HAND CONTROL VALVES
Manual Push - Pull Valves (Two Hole Mounting)

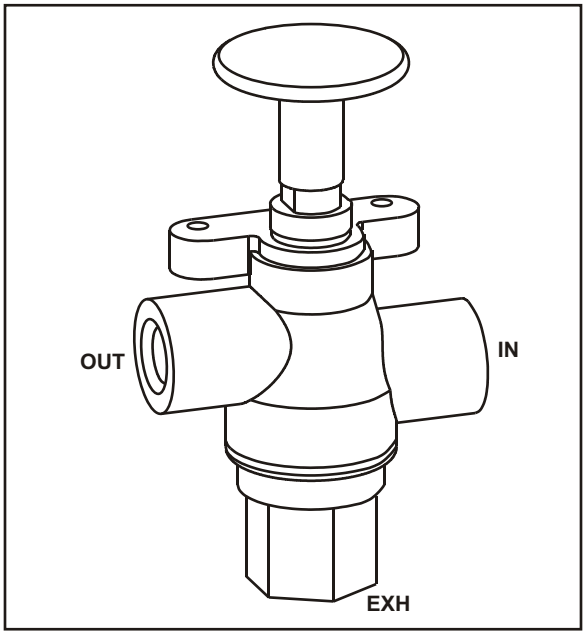

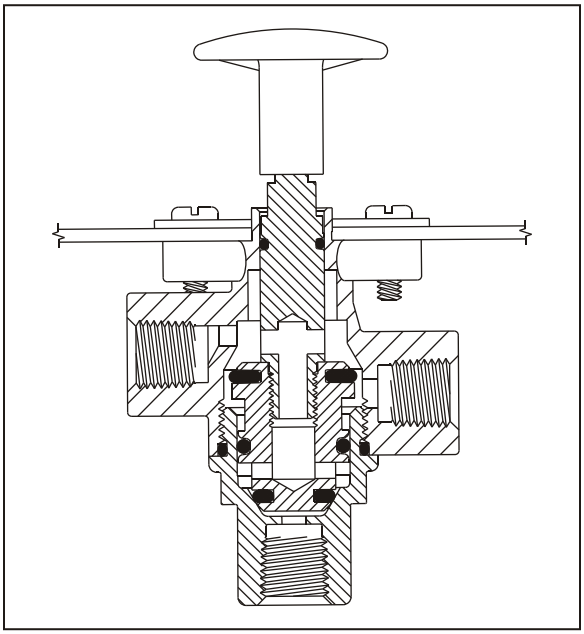

INFORMATION: • Commonly used as dash valve inside tractor or truck except 17600B which is used outside on dollies & trailers

- Piping examples on page 73
- * Utilizes long shaft
- **REPAIR KIT 176-5**

PLATE 817

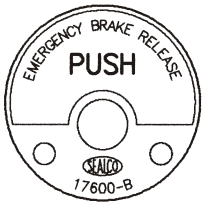

PLATE 826

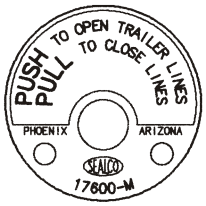

PLATE 855

KNOB 13 (BLACK PLASTIC)

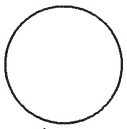
KNOB 13-1 (BLACK PLASTIC)

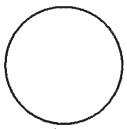
KNOB 0190 (BLACK METAL)

KNOB 9008 (BLACK PLASTIC)

PART NUMBER	NAME PLATE	KNOB	PORT SIZES (NPT)			COMMENTS
			Inlet	Outlet	Exhaust	
17600	817	13	1/4"	1/4"	1/4"	Cab Control
17600B	826	13	1/4"	1/4"	1/4"	Dolly & Trailer Park Brake Release
17600B-2	-	-	1/4"	1/4"	1/4"	Basic Valve
17600M *	855	13	1/4"	1/4"	1/4"	Use w/ 7700 for Breakaway Conversions
110114	-	9008	1/4"	1/4"	1/4"	Park Brake Release
110274	826	0190	1/4"	1/4"	1/4"	Park Brake Release
110284	-	13	1/4"	1/4"	1/4"	Park Brake Release
110514	817	0190	1/4"	1/4"	1/4"	Cab Control
110644	-	13-1	1/4"	1/4"	1/4"	Contains screws but no plate

HAND CONTROL VALVES
Manual Push - Pull Valves (One Hole Mounting)

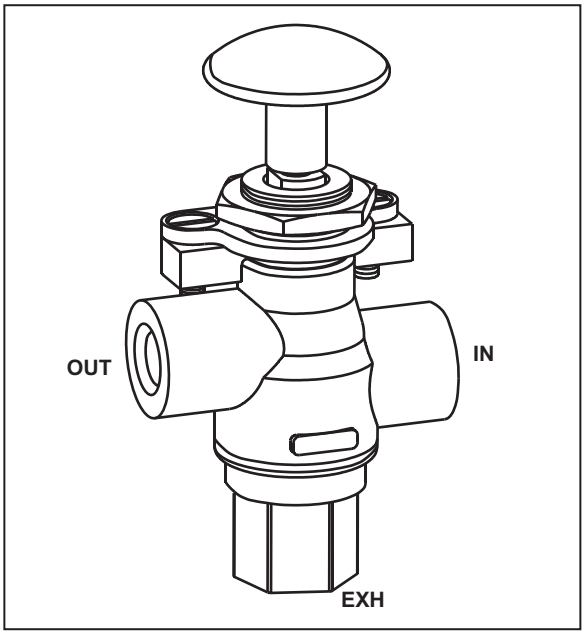

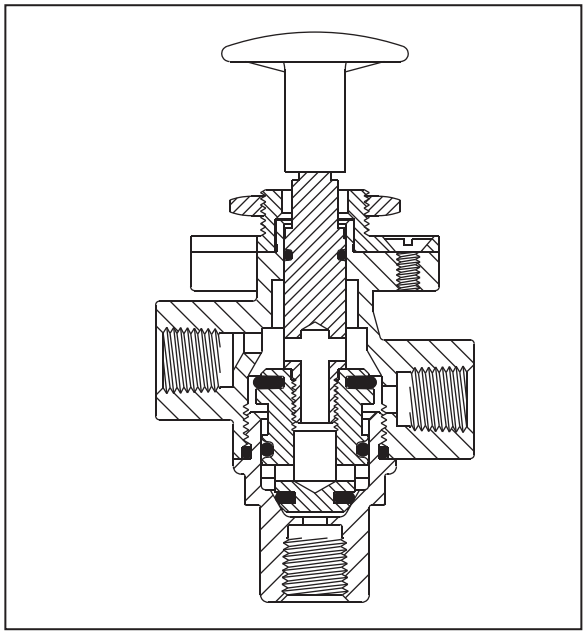

INFORMATION: • Commonly used as dash valve inside tractor, truck or dolly • Single hole mounting

- **REPAIR KIT 176-5**

PLATE 844

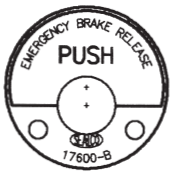

PLATE 8026

KNOB 13(BLACK PLASTIC)

KNOB 13-G(GREEN PLASTIC)

KNOB 13-R(RED PLASTIC)

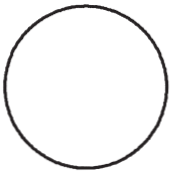
13-I(BLACK PLASTIC)

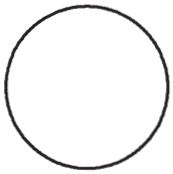
KNOB 0190(BLACK METAL)

KNOB 9008(BLACK PLASTIC)

PART NUMBER	NAME PLATE	KNOB	PORT SIZES (NPT)			COMMENTS
			Inlet	Outlet	Exhaust	
17600L	844	13	1/4"	1/4"	1/4"	Cab Control
17600LB	8026	13	1/4"	1/4"	1/4"	Park Brake Release
17600LG	-	13R	1/4"	1/4"	1/4"	Park Brake Release
17600LR	-	13R	1/4"	1/4"	1/4"	Cab Control
110252	-	9008	1/4"	1/4"	1/4"	Park Brake Release
110512	-	13-1	1/4"	1/4"	1/4"	Park Brake Release
110760	-	0190	1/4"	1/4"	1/4"	Park Brake Release

HAND CONTROL VALVES

Automatic Shut-off – Pull-Push Valves (Two Hole Mounting)

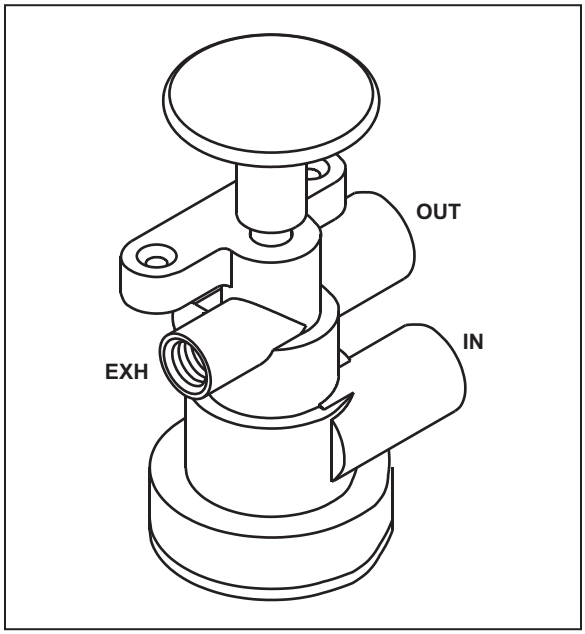

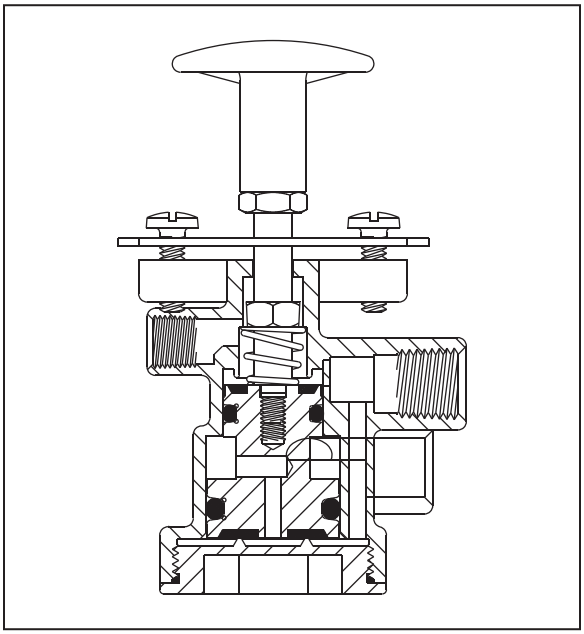

INFORMATION:

- Commonly used as dash valve inside tractor or truck
- Automatic shut-off when inlet pressure drops below indicated psi
- Double hole mounting
- **SHUTTLE ASSEMBLY 99600-5**
- **MINOR REPAIR KIT 996-5**

KNOB 13(BLACK PLASTIC)

PLATE 806

PLATE 819

PART NUMBER	NAME PLATE	KNOB	PORT SIZES (NPT)			SHUT-OFF (PSI)
			Inlet	Outlet	Exhaust	
99600	806	13	1/4"	1/4"	1/8"	30 ± 5
99600B	819	13	1/4"	1/4"	1/8"	30 ± 5
99600-2	-	-	1/4"	1/4"	1/8"	30 ± 5
110189	819	13	1/4"	1/4"	1/8"	45 ± 5
110221	819	13	1/4"	1/4"	1/8"	60 ± 5

HAND CONTROL VALVES

Automatic Shut-off – Push-Pull Valves (One Hole Mounting)

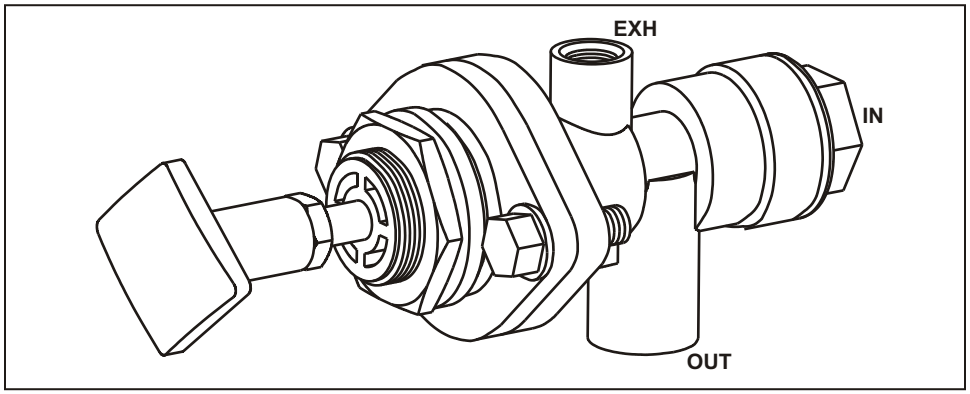

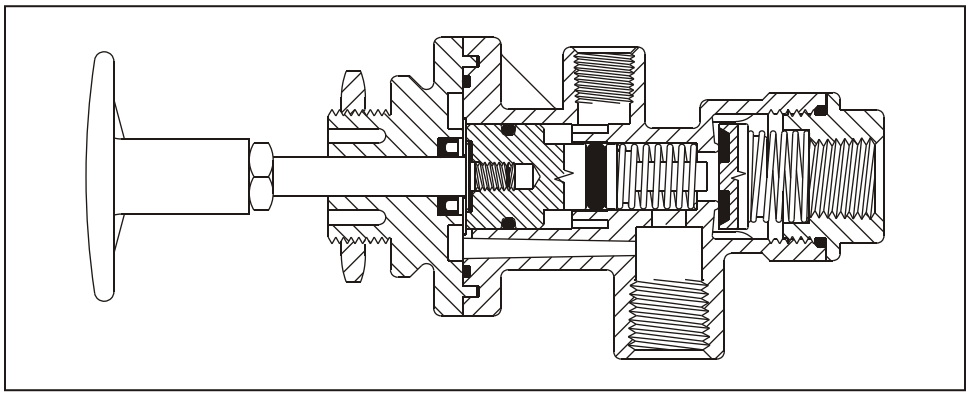

INFORMATION:

- Commonly used as dash valve inside tractor or truck
- Automatic shut-off when inlet pressure drops to 30 ± 5 PSI
- Single hole mounting
- **REPAIR KIT A256-5**

13-Y(YELLOW)

13-R(RED)

PART NUMBER	KNOB	PORT SIZES (NPT)			SHUT-OFF (PSI)
		Inlet	Outlet	Exhaust	
A25600	13R	1/4"	1/4"	1/8"	30 ± 5
A25600Y	13Y	1/4"	1/4"	1/8"	30 ± 5
A25600-2	-	1/4"	1/4"	1/8"	30 ± 5

HAND CONTROL VALVES
Automatic Closing Valves

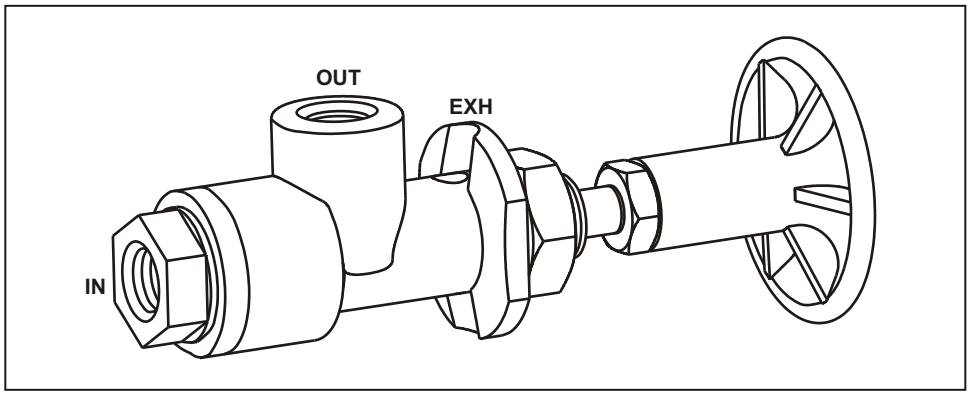

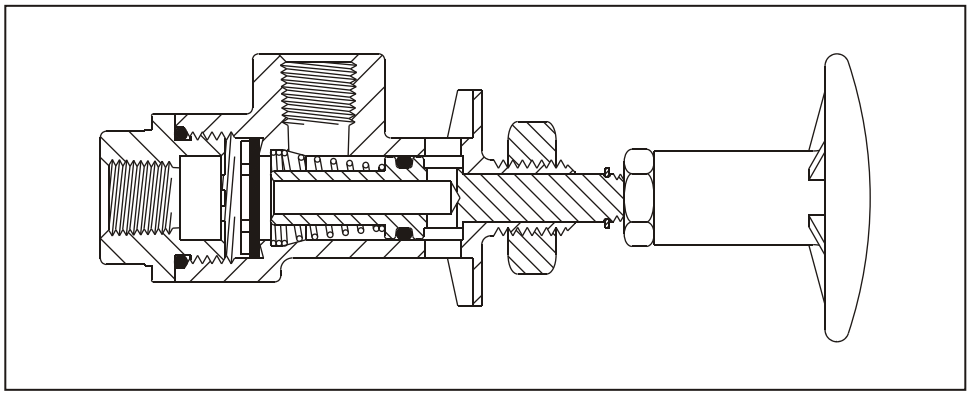

INFORMATION:

- Commonly used as dash valve inside tractor or truck for applications shown below
- Valve opened manually by holding knob in, automatically closes when force removed
- **REPAIR KIT 110241**

13-L (BLACK)

13-S (BLACK)

13-G (GREEN)

PART NUMBER	KNOB	PORT SIZES (NPT)		MOUNTING THREAD SIZE	APPLICATION
		Inlet	Outlet		
3450S	13-S	1/8"	1/8"	7/8"	Starter Control
340250	13-S	1/8"	1/8"	1/2"	Starter Control
342501	13-S	1/8"	1/8"	7/16"	Starter Control
3450G	13-G	1/8"	1/8"	7/8"	Emergency Release
340350	13-G	1/8"	1/8"	1/2"	Emergency Release
342502	13-G	1/8"	1/8"	7/16"	Emergency Release
110103	13-L	1/8"	1/8"	1/2"	Differential Lockout

HAND CONTROL VALVES
Lever Control Valves

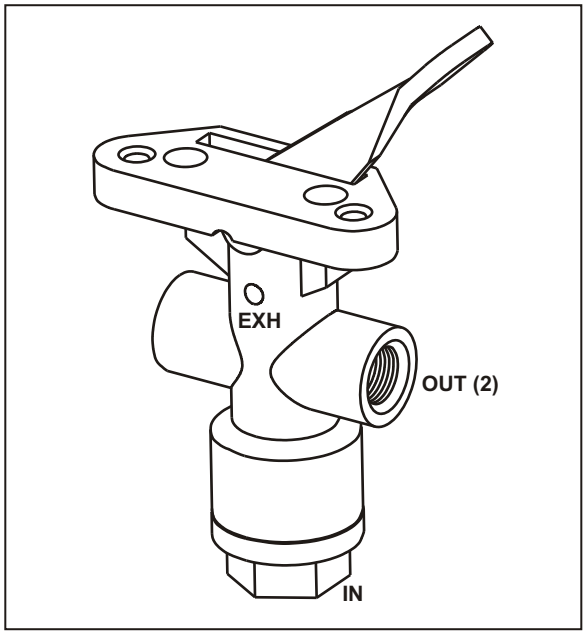

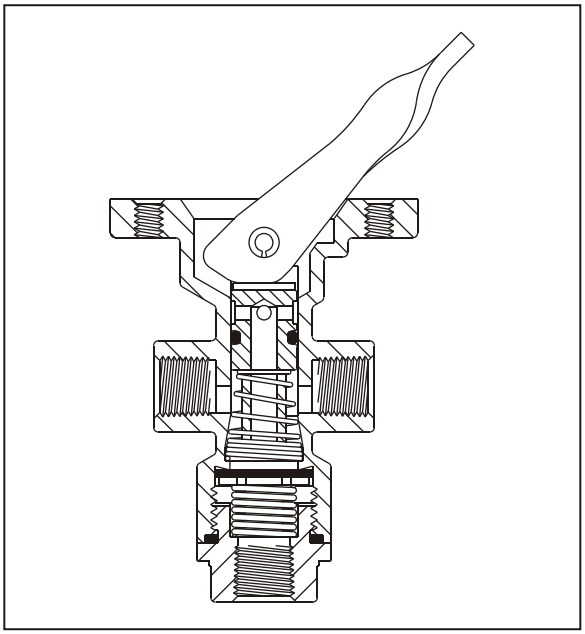

INFORMATION:

- Used for a variety of applications
- Manual operation
- **REPAIR KIT 110242**

PLATE 812

PLATE 821

PLATE 8022

PART NUMBER	NAME PLATE	PORT SIZES (NPT)	
		Inlet	Outlet (2)
21600	821	1/8"	1/8"
21600D	812	1/8"	1/8"
21600-2	None	1/8"	1/8"
110167	None	1/8"	1/8"
110300	8097	1/8"	1/8"
110301	8098	1/8"	1/8"
110413	8116	1/8"	1/8"
216050	8023	1/8"	1/8"
216100	8007	1/8”	1/8”
216200	8022	1/8"	1/8"

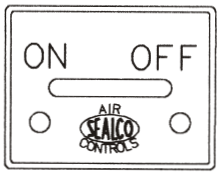

PLATE 8023

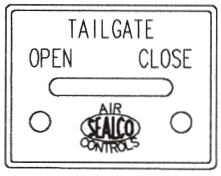

PLATE 8097

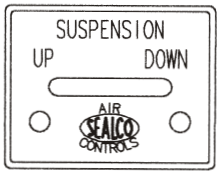

PLATE 8098

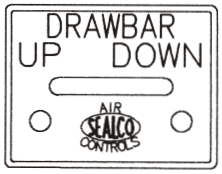

PLATE 8116

HAND CONTROL VALVES
Pressure Control Valve

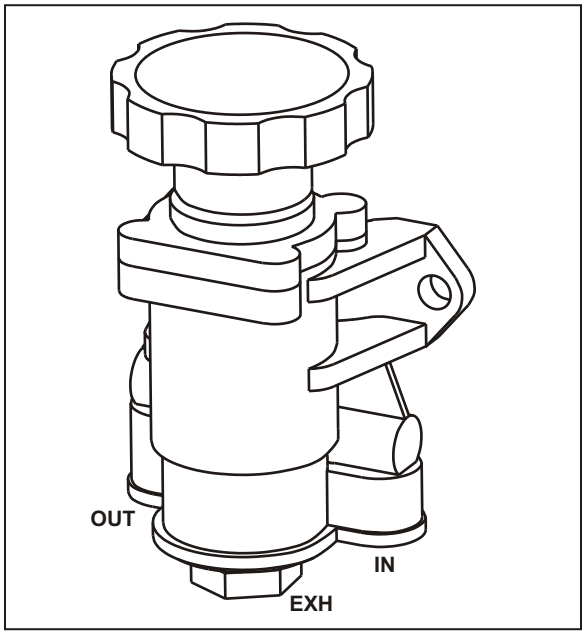

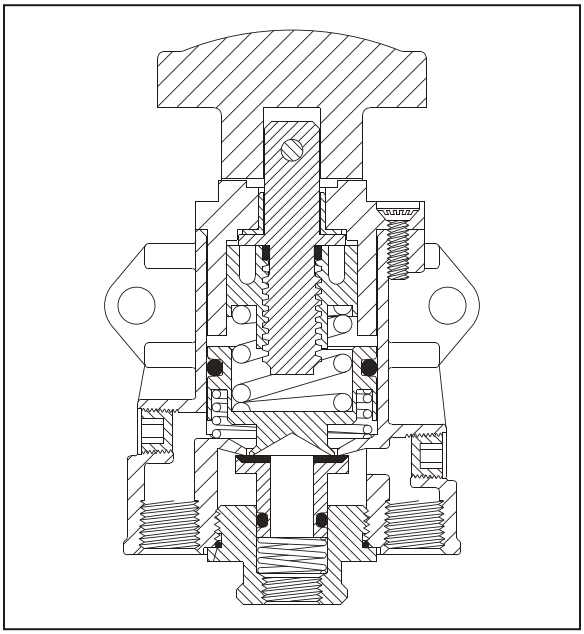

INFORMATION:

- Commonly used on tractor tag axles & pusher axles
- Manual knob operation
- **PLUG UNIT 5900-5**
- **REPAIR KIT 59-5**

PART NUMBER	PORT SIZES (NPT)			NOMINAL PRESSURE SETTING
	Inlet	Outlet	Exhaust	
5400	1/4"	1/4"	1/4"	0 psi to Reservoir Pressure

HAND CONTROL VALVES
Pressure Control Valves

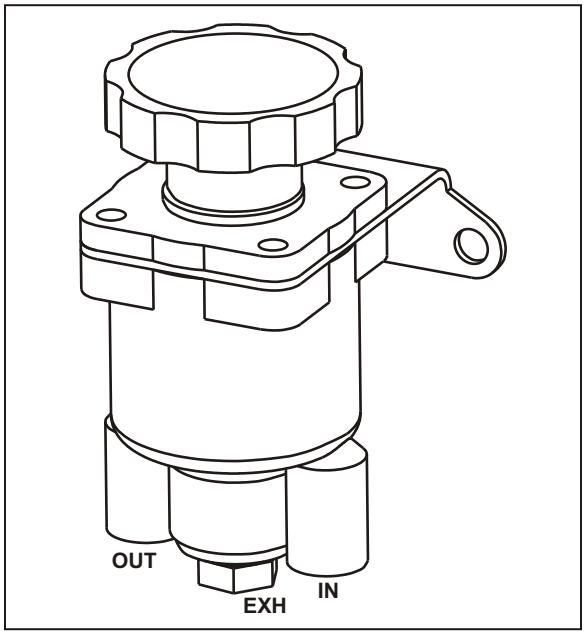

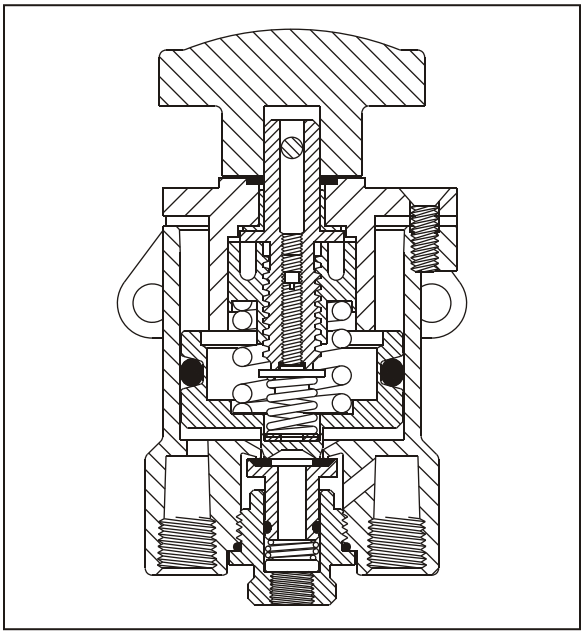

INFORMATION:

- Commonly used on tractor tag axles & pusher axles
- Manual knob operation
- **PLUG UNIT 9400-5**
- **REPAIR KIT 94-5**

PART NUMBER	PORT SIZES (NPT)			NOMINAL PRESSURE SETTING
	Inlet	Outlet	Exhaust	
9400	1/4"	1/4"	1/8"	5 to 6 psi to 85 psi Max.
940000	1/4"	1/4"	1/8"	0 psi to Reservoir Pressure

HAND CONTROL VALVES
Trailer Brake Hand Valves

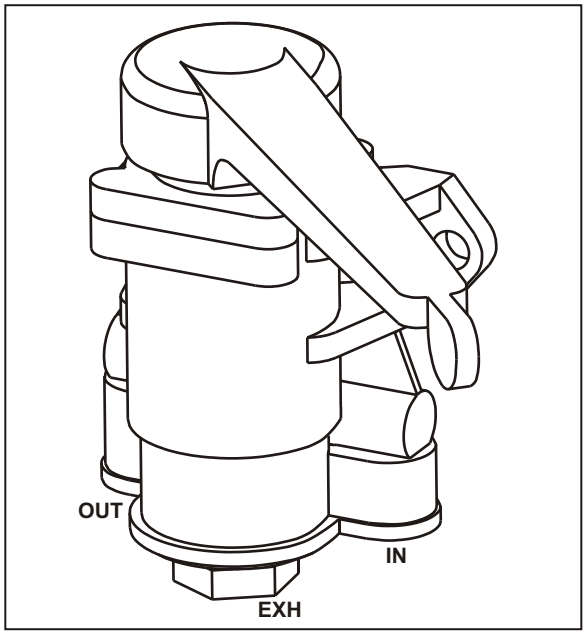

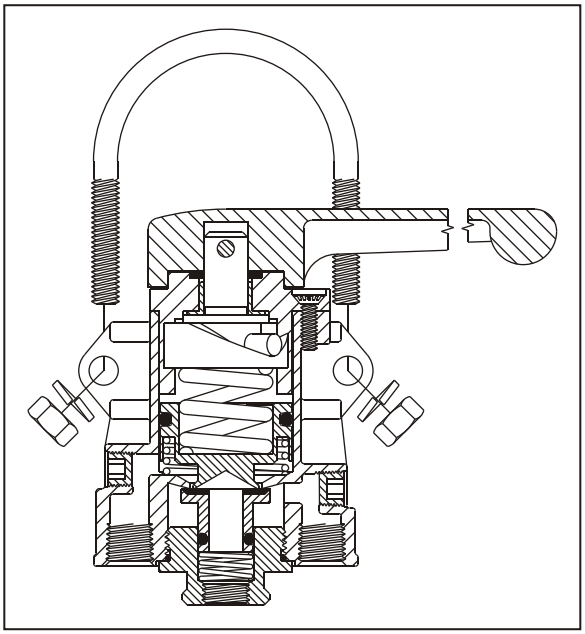

INFORMATION:

- Commonly used inside tractor cab to operate trailer brakes
- Not to be used for parking
- **PLUG UNIT 5900-5**
- **MINOR PLUG KIT 59-5**

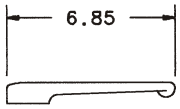

HANDLE 110176

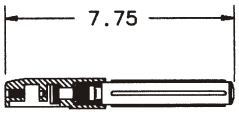

HANDLE 110149

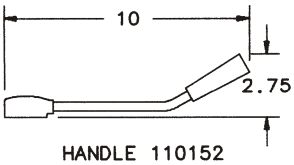

HANDLE 110152

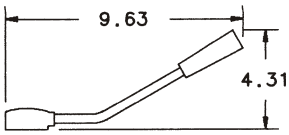

HANDLE 110153

PART NUMBER	HANDLE	PORT SIZES (NPT)			MOUNTING KIT	MOUNTING
		Inlet	Outlet	Exhaust		
5900	110176	1/4"	1/4"	1/4"	110174	Column
5900-1	NO	1/4"	1/4"	1/4"	NO	-
5900B	110176	1/4"	1/4"	1/4"	110182	Dash
5900G	110153	1/4"	1/4"	1/4"	110174	Column
5900GI	110152	1/4"	1/4"	1/4"	110174	Column
5900L	110149	1/4"	1/4"	1/4"	110174	Column
5900R	NO	1/4"	1/4"	1/4"	110174	Rem. Column
110436	NO	1/4"	1/4"	1/4"	NO	Non-Locking
110516	110152	1/4"	1/4"	1/4"	110174	Non-Locking

PRESSURE PROTECTION VALVES

Pressure Protection Valves

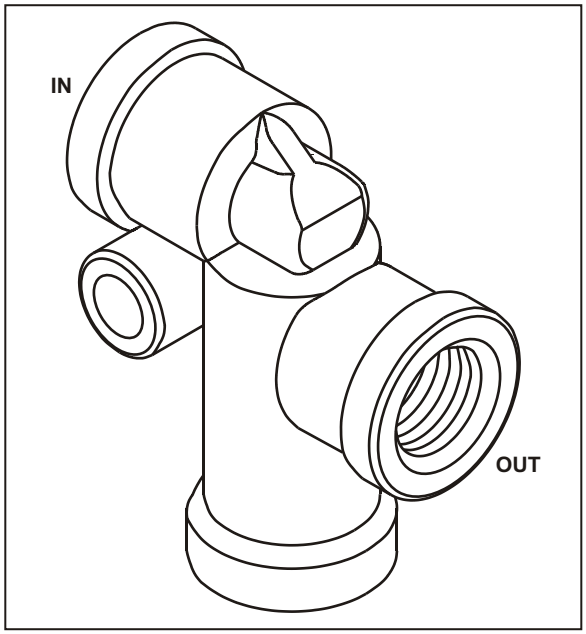

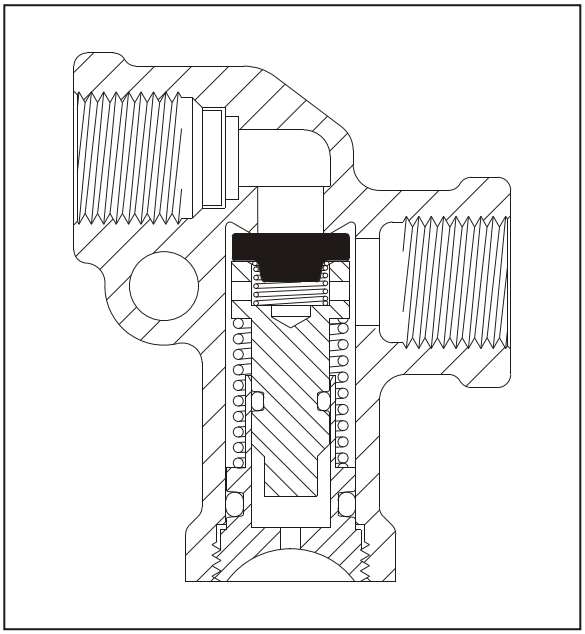

INFORMATION:

- Commonly used to protect air brake reservoirs from being depleted by the failure of other air accessory items
- Valves close at the nominal psi indicated below
- Valves include an internal filter & positive one-way check valve
- Piping examples on pages 71, 74, 75 & 76
- **REPAIR KITS** see below

PART NUMBER	PORT SIZES (NPT)		NOMINAL CLOSING PRESSURE	REPAIR KIT
	Inlet	Outlet		
140200	3/8"	3/8"	50 psi	140201
140270	3/8"	3/8"	60 psi	140271
140280	3/8"	3/8"	70 psi	140281
140290	3/8"	3/8"	80 psi	140291
140300	1/4"	1/4"	50 psi	140201
140370	1/4"	1/4"	60 psi	140271
140380	1/4"	1/4"	70 psi	140281
140390	1/4"	1/4"	80 psi	140291

PRESSURE PROTECTION VALVES

Emergency Brake Valve Pressure Protection Valve

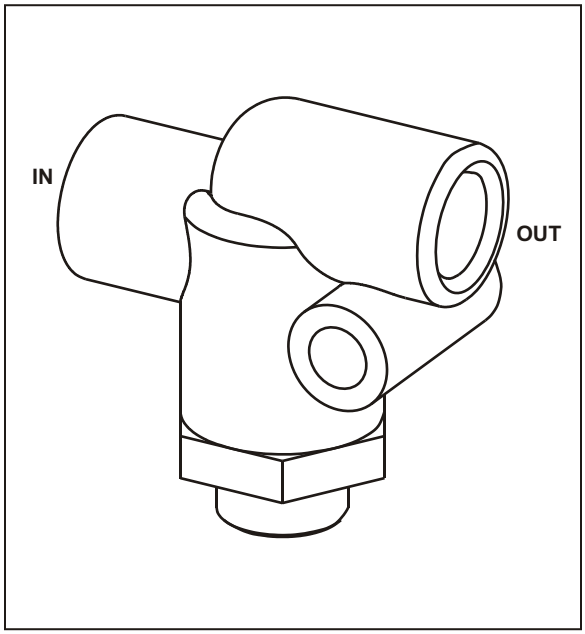

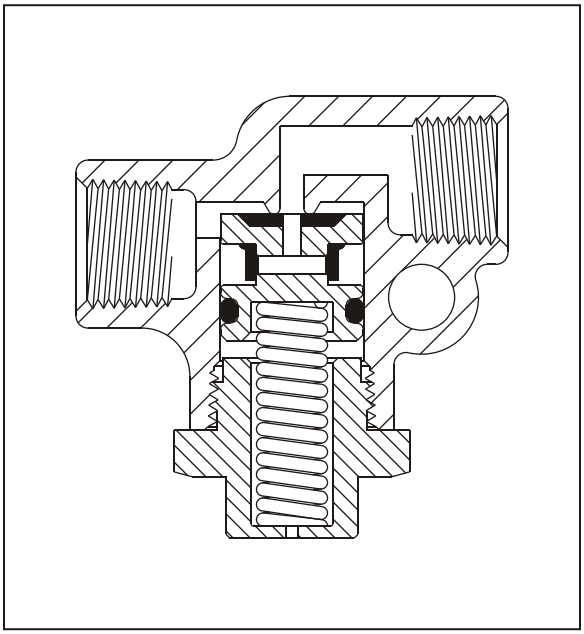

INFORMATION:

- Commonly used on converter dollies, turnable axles and air lift axles with service brake chambers
- Used in conjunction with 110338 Relay Emergency Valve and 110376 Emergency Control Valve
- Contains internal Check Valve which allows full reservoir pressure to be applied to Relay Valve
- Complies with all changes to FMVSS 121, Docket 90-3 effective 10-8-92
- Piping examples on page 73

PART NUMBER	PORT SIZES (NPT)		NOMINAL CLOSING PRESSURE
	Inlet	Outlet	
110257	3/8"	3/8"	70 psi

PRESSURE PROTECTION VALVES

Pressure Protection Valves

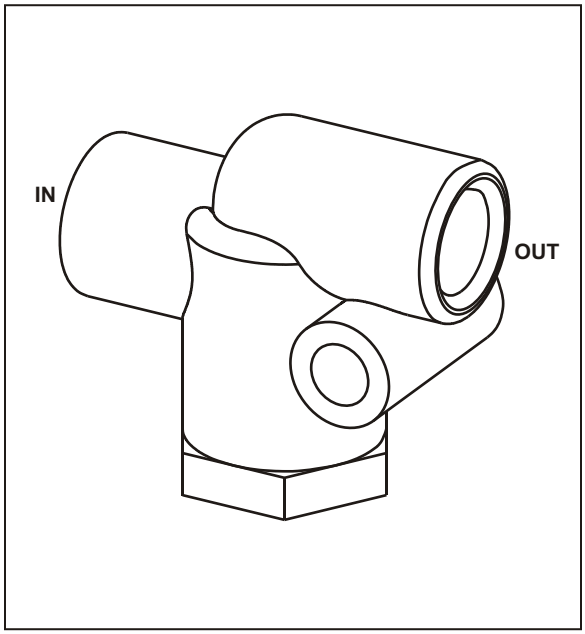

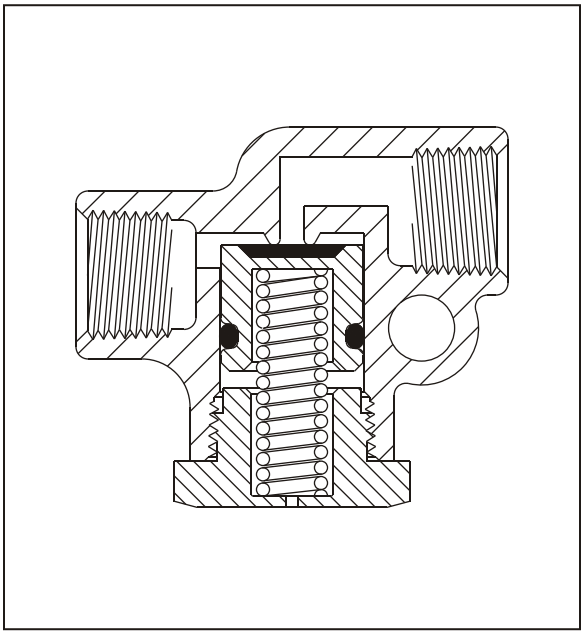

INFORMATION:

- Commonly used to protect air brake reservoirs from being depleted by the failure of other air accessory items
- Valves open at a factory set psi & allow air to flow through to the Outlet Port
- Valves close at the nominal psi indicated below

PART NUMBER	PORT SIZES (NPT)		NOMINAL CLOSING PRESSURE
	Inlet	Outlet	
110258	3/8"	3/8"	90 psi
110657	3/8"	3/8"	70 psi

MISCELLANEOUS VALVES
Anti Back Charge Valve

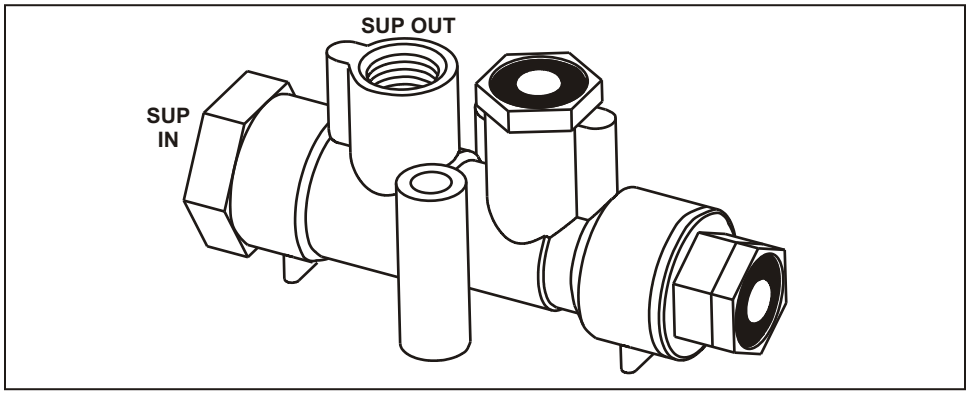

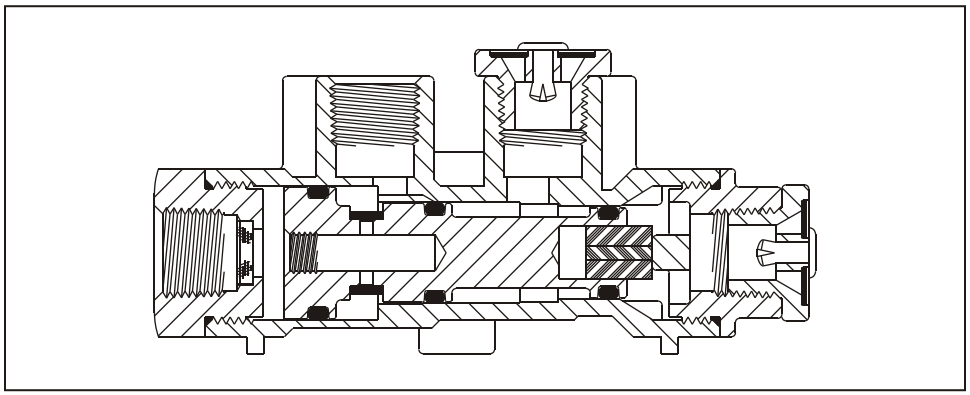

INFORMATION:

- Commonly used with shut-off cocks on dollies and trailers designed to tow another trailer
- Prevents anti back charge if supply line shut-off cock on lead trailer is closed

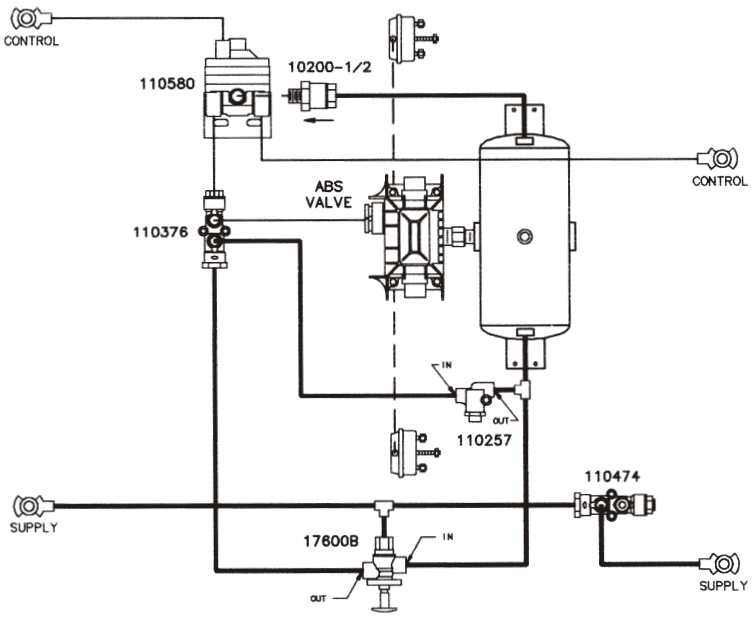

PART NUMBER	PORT SIZES (NPT)	
	Supply In	Supply Out
110474	3/8"	3/8"

PRESSURE PROTECTION VALVES
Adjustable Pressure Protection Valves

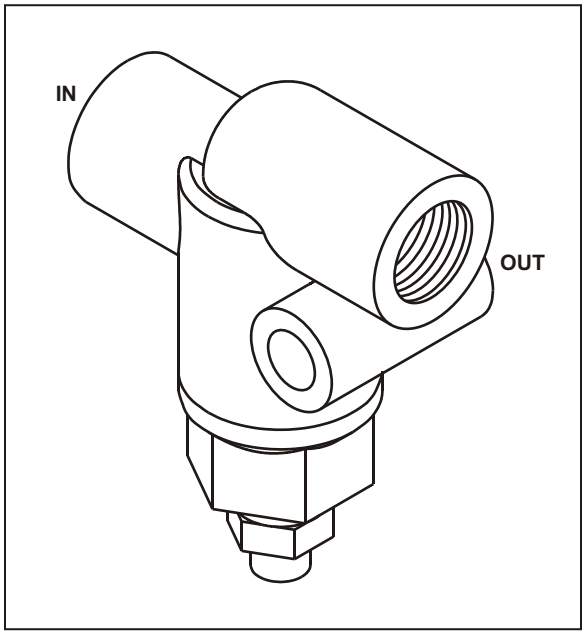

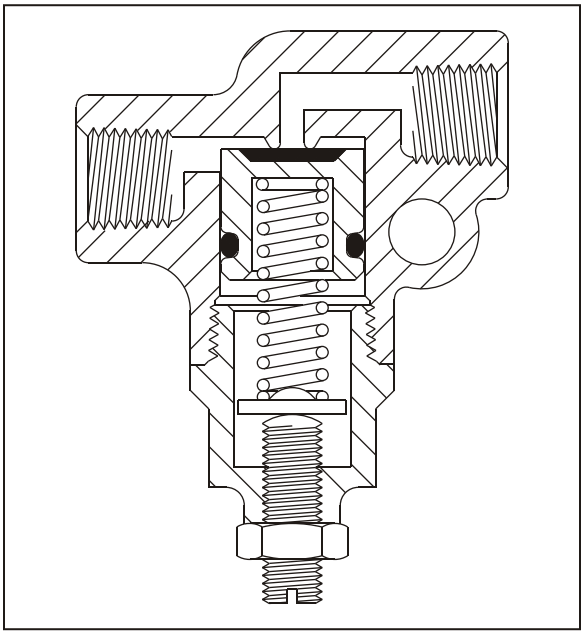

INFORMATION:

- Commonly used to protect air brake reservoirs from being depleted by the failure of other air accessory items
- Valves open at a factory set psi & allow air to flow through to the Outlet Port
- Valves close at the nominal psi indicated below

PART NUMBER	PORT SIZES (NPT)		NOMINAL CLOSING SETTING	ADJUSTABLE CLOSING	
	Inlet	Outlet		Minimum	Maximum
1300	1/4"	1/4"	60 psi	20 psi	70 psi
1300-45	1/4"	1/4"	45 psi	20 psi	70 psi
1300-80	1/4"	1/4"	80 psi	20 psi	85 psi

CHECK VALVES
One - Way Check Valves

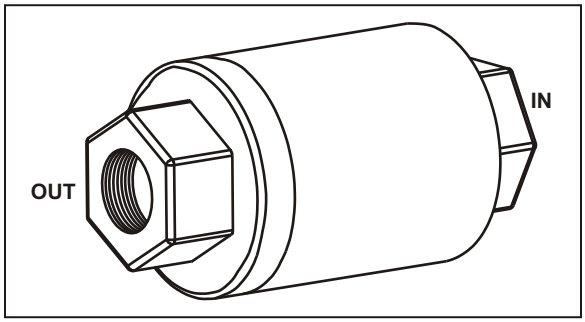

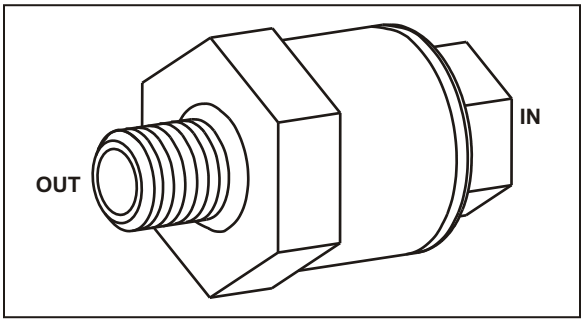

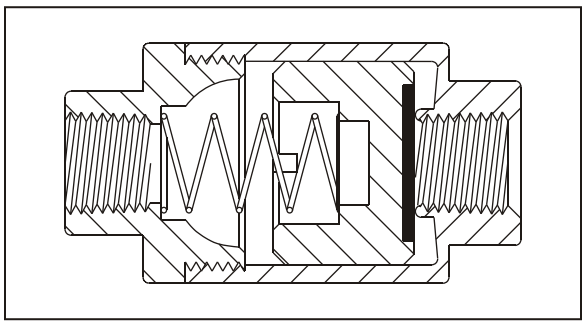

2200 Series

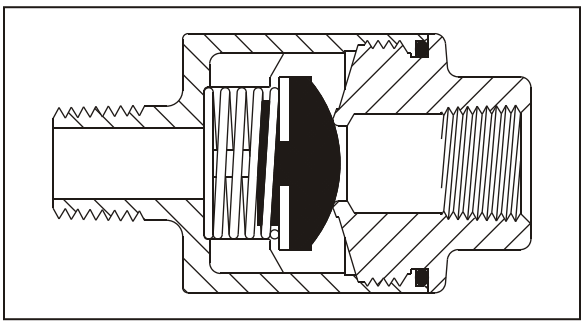

10200 Series

INFORMATION:

- Commonly used ahead of and in between air reservoirs
- Allows air to flow through the valve in only one direction from inlet to outlet
- When loss of inlet pressure occurs, prevents air from flowing back through valve
- Piping examples on pages 72 & 73

PART NUMBER	PORT SIZES (NPT)	
	Inlet	Outlet
2200 1/4	1/4"	1/4"
2200 1/2	1/2"	1/2"
2200 3/4	3/4"	3/4"

PART NUMBER	PORT SIZES (NPT)	
	Inlet	Outlet
10200 3/8	3/8"	3/8"
10200 1/2	1/2"	1/2"
10200 3/4	3/4"	3/4"
102001	3/4"	1/2"
102002	1/2"	3/4"

CHECK VALVES
Two - Way Check Valves

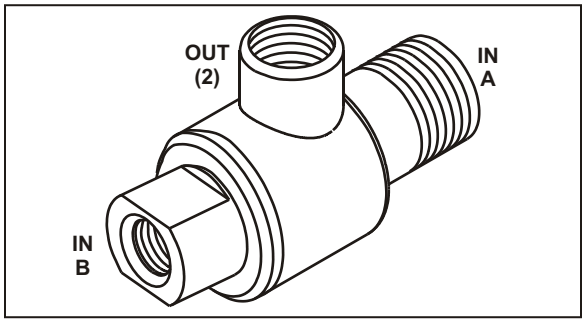

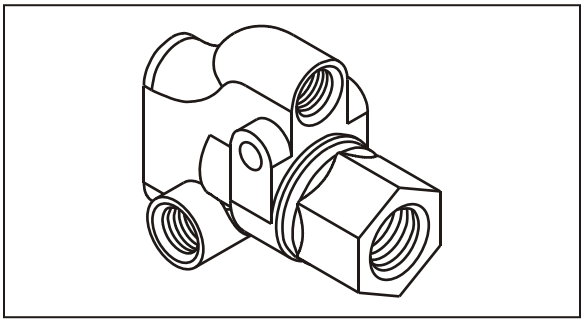

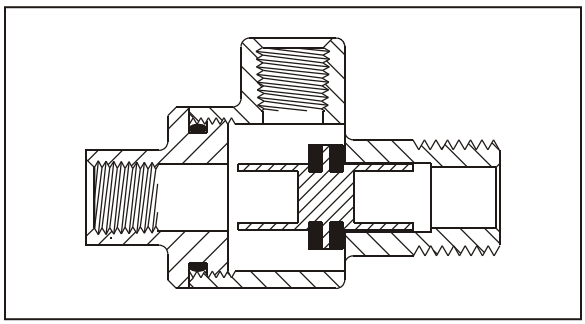

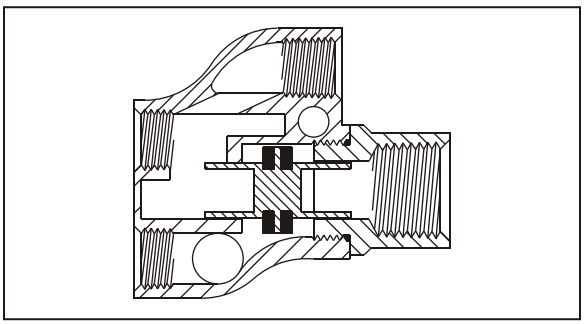

3200 Series **5200**

INFORMATION:

- 3200 Series commonly used between Foot Valves & Hand Valves
- 5200 commonly used between supply air reservoirs that are merged together or between Foot Valve Delivery 1 and Delivery 2 lines to the trailer
- Allows air to flow through to outlet port
- **REPAIR KIT 32-5** for 3200 Series
- **REPAIR KIT 52-5** for 5200

PART NUMBER	PORT SIZES (NPT)				
	Inlet A	Inlet B	Inlet C	Outlet A	Outlet B
3200	1/4"	1/2"	-	1/4"	1/4"
3200 1/4	1/4"	1/4"	-	1/4"	1/4"
5200	1/4"	1/4"	1/2"	1/4"	1/4"

CHECK VALVES
Two - Way Check Valves

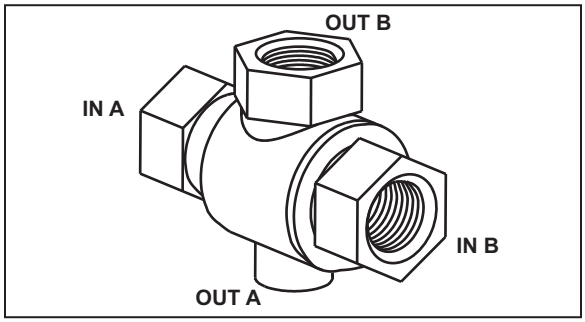

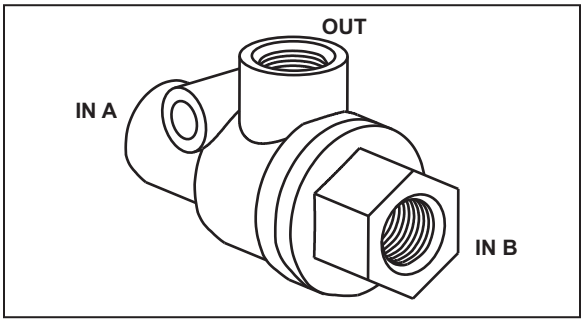

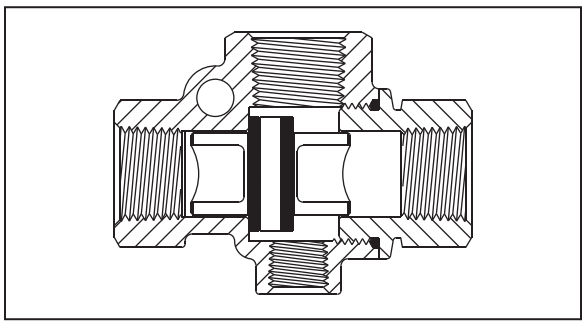

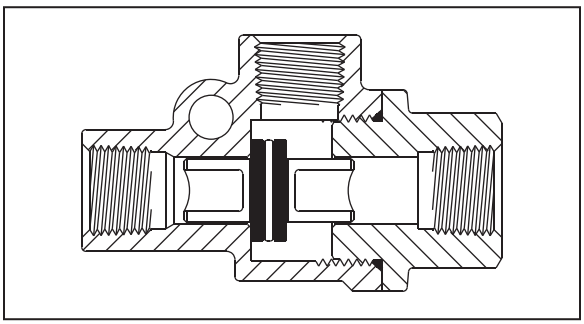

7200 **320100**

INFORMATION:

- Commonly used between supply air reservoirs that are merged together or between Foot Valves Delivery 1 and Delivery 2 lines to the trailer
- Allows air to flow through to outlet port
- **REPAIR KIT 72-5** for 7200
- **REPAIR KIT 320105** for 320100

PART NUMBER	PORT SIZES (NPT)			
	Inlet A	Inlet B	Outlet A	Outlet B
7200	1/2"	1/2"	1/4"	1/2"
320100	3/8"	3/8"	3/8"	-

SUSPENSION CONTROL VALVES

Air Bag Control Valve – Manual Or Automatic Operation

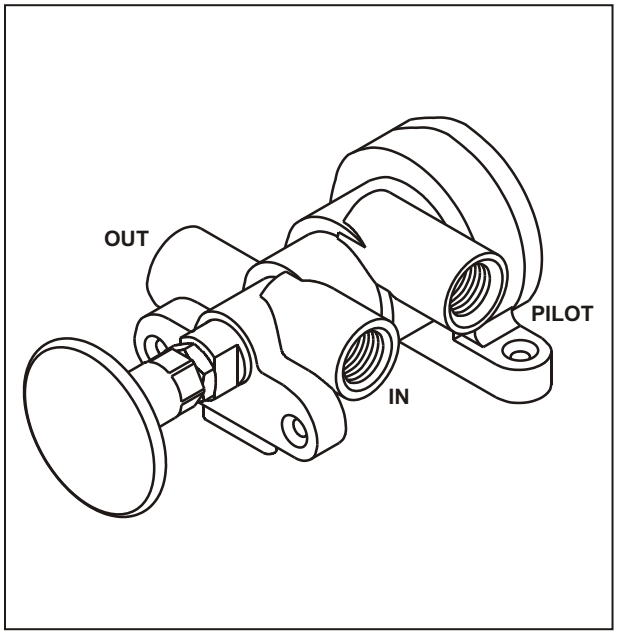

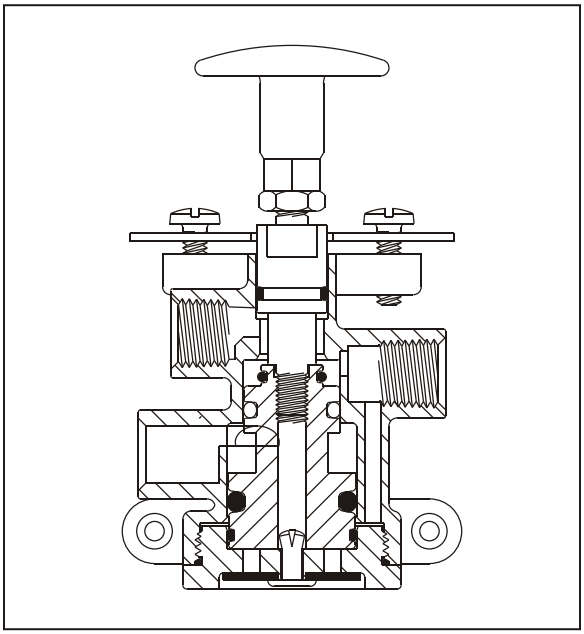

INFORMATION:

- Commonly used to control the inflation & deflation of air suspension bags
- In manual mode, allows for movement of trailer without re-inflating air bags
- In auto reset mode, valv e resets to fill air bags when trailer parking brakes are released
- Operates with all air suspension systems
- For **MANUAL** operation, insert the "Breather Plug" into Pilot Port, do not use any sealant on plug
- For **AUTO RESET** operation, discard the "Breather Plug" and connect the Pilot Port to the supply line

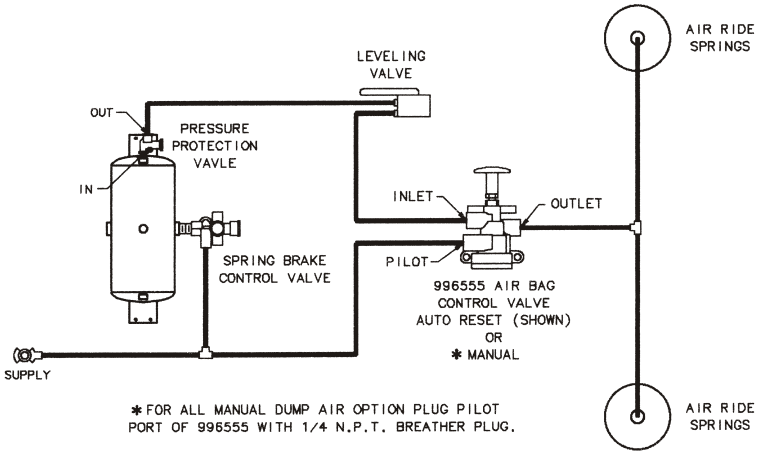

PART NUMBER	PORT SIZES (NPT)		
	Inlet	Outlet	Pilot
996555	1/4"	1/4"	1/4"

SUSPENSION CONTROL VALVES
Air Bag Control Valve – Manual Operation

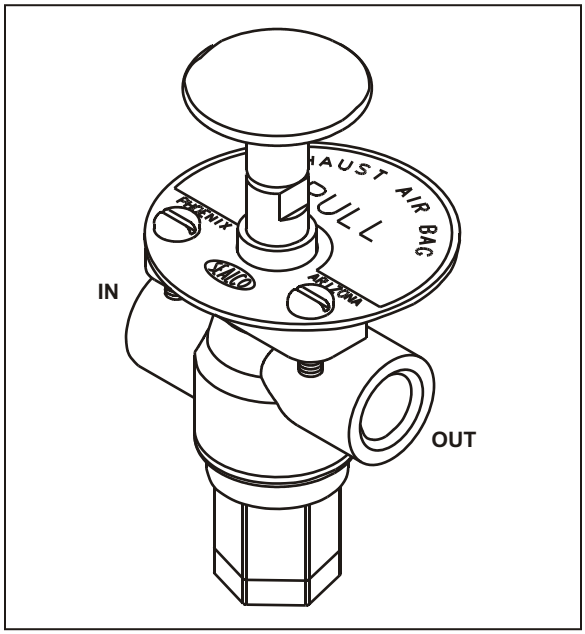

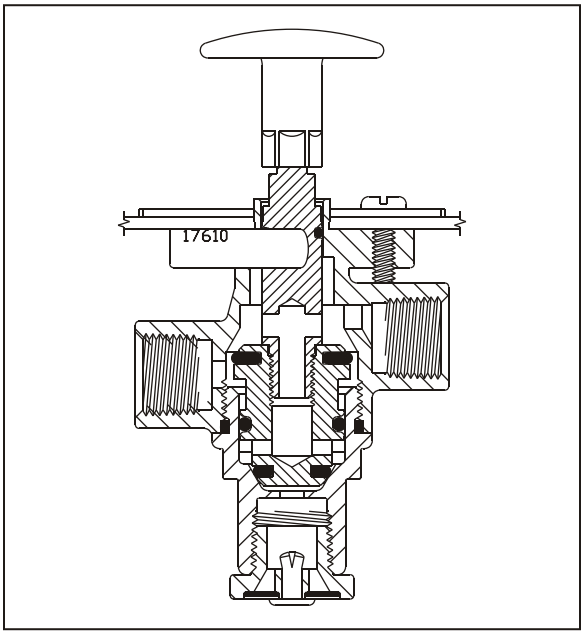

INFORMATION:

- Commonly used to control the inflation & deflation of air suspension bags
- Allows for movement of trailer back to dock without re-inflating air bags
- Operates with all air suspension systems
- Pull to manually exhaust air from air bags

  Push to refill air bags from reservoir

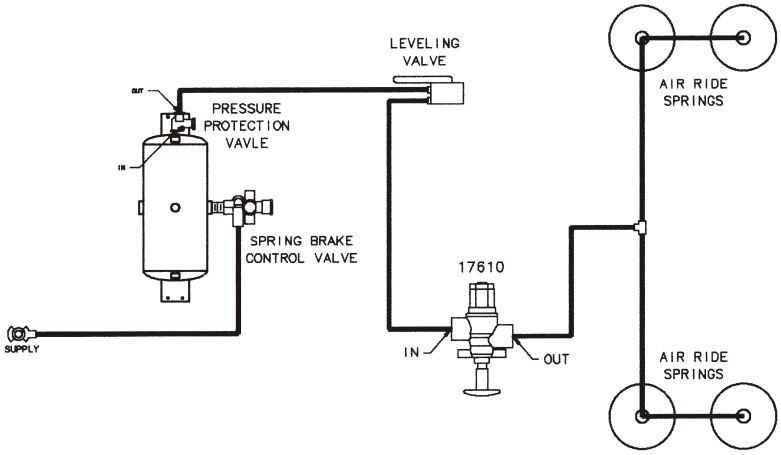

PART NUMBER	PORT SIZES (NPT)	
	Inlet	Outlet
17610	3/8“	3/8“

SUSPENSION CONTROL VALVES
Air Bag Control Valve – Automatic Operation

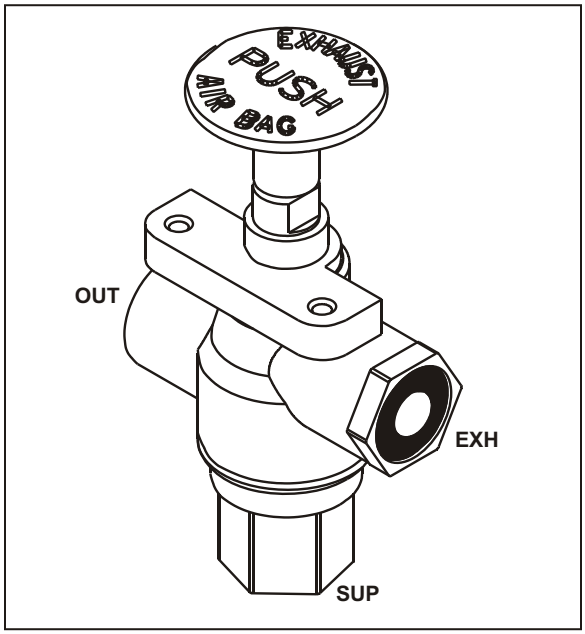

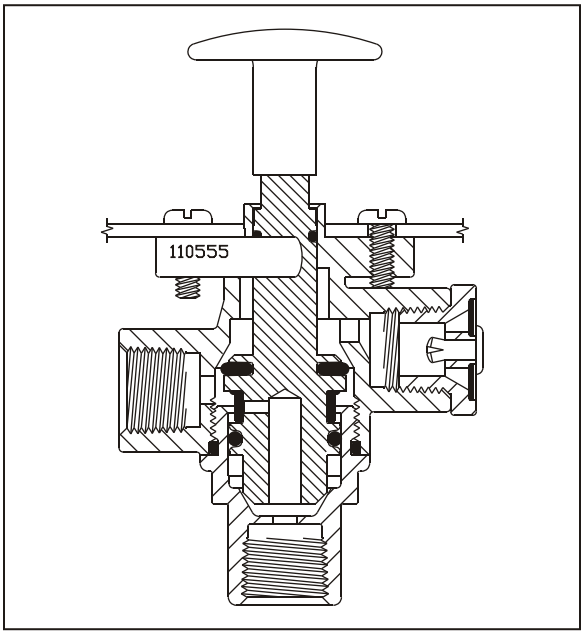

INFORMATION:

- Commonly used to control the inflation & deflation of suspension air bags
- Normally used with 110587 Pilot Valve
- Operates with all air suspension systems but not recommended for suspensions that exhibit dock walk
- Manually operated to exhaust air from the air ride springs
- Automatically resets to fill the air springs when the trailer parking brakes are released
- **13-A KNOB INCLUDED**

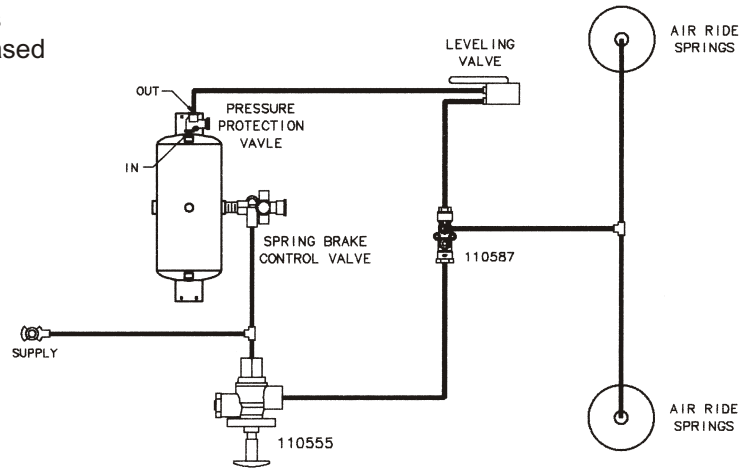

PART NUMBER	PORT SIZES (NPT)		
	Supply	Outlet	Exhaust
110555	1/4"	1/4"	1/4"

SUSPENSION CONTROL VALVES
Fast Fill Air Suspension Valves

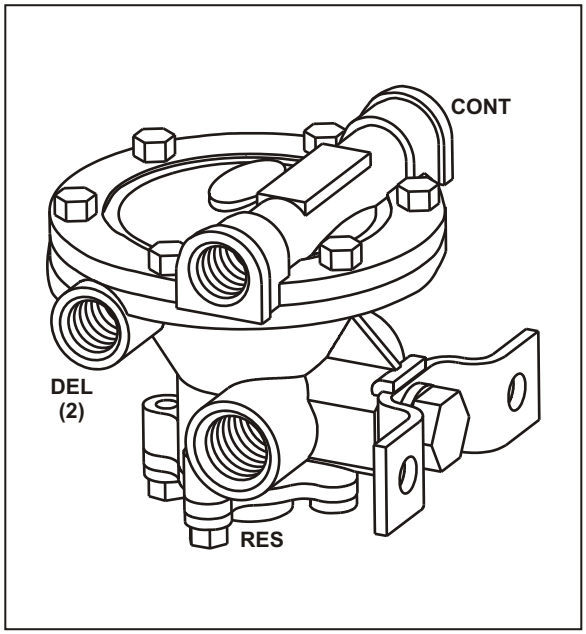

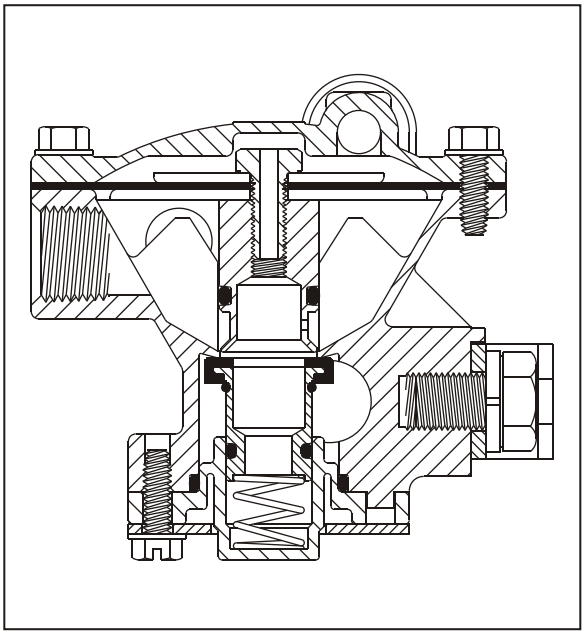

Frame mounted 110595 pictured above – also available as tank/nipple mounted 110597

INFORMATION:

- Commonly used to speed the inflation of air suspension bags
- Uses air from reservoir in addition to height control system
- Exhausts air in normal manner
- Totally automatic operation
- Available both as frame mount (110595) or tank/nipple mount (110597)
- Piping examples on page 76

PART NUMBER	PORT SIZES (NPT)			
	Control (2)	Reservoir	Delivery (2)	Delivery
110595	3/8"	1/2" (2)	3/8"	1/2"
110597	3/8"	1/2" (1)	3/8"	N/A

SUSPENSION CONTROL VALVES
Air Suspension Pilot Valve

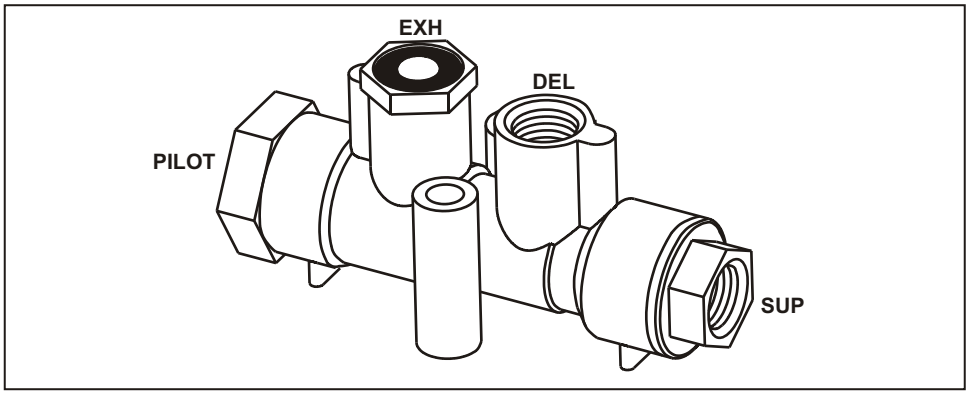

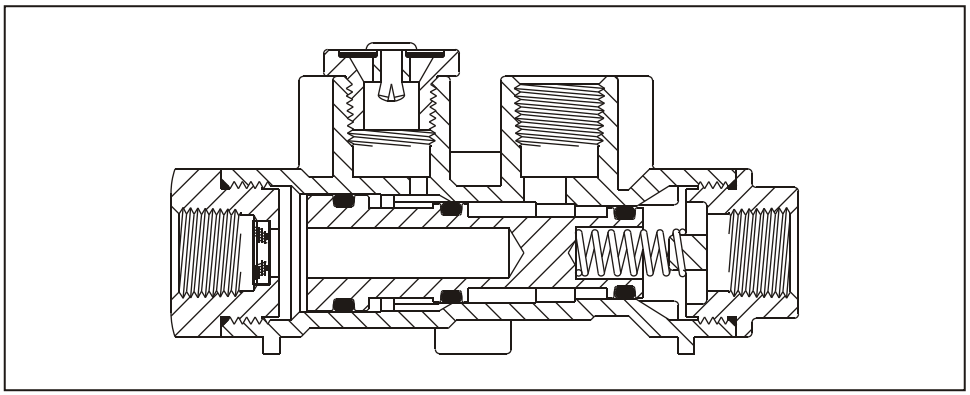

INFORMATION:

- Pilot air pressure directly from the trailer supply line, or a manual control valve, opens the supply port of the Air Suspension Pilot Valve and allows the leveling valve to fill the air suspension bags
- Discharging the pilot air closes the Air Suspension Pilot Valve which blocks the delivery of air from the leveling valve and exhausts the air suspension bags

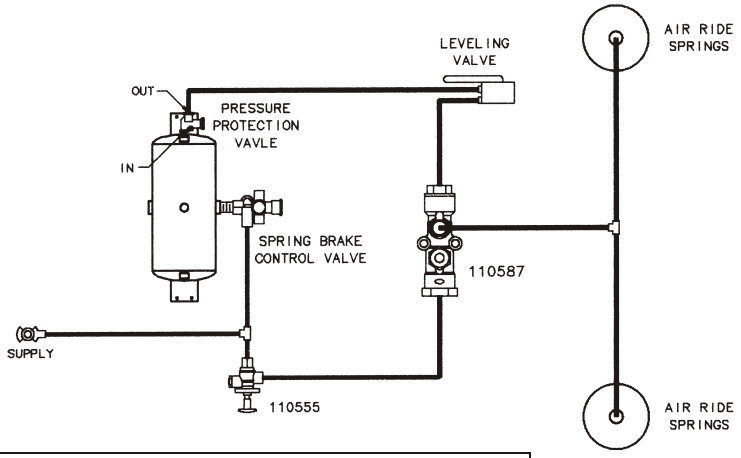

PART NUMBER	PORT SIZES (NPT)			
	Supply	Delivery	Exhaust	Pilot
110587	3/8"	3/8"	3/8"	3/8"

SUSPENSION CONTROL VALVES
Lift Axle Control Valve

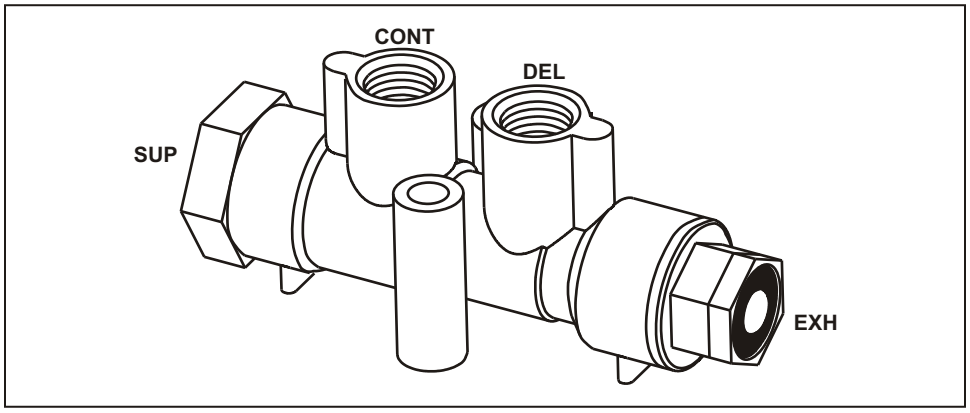

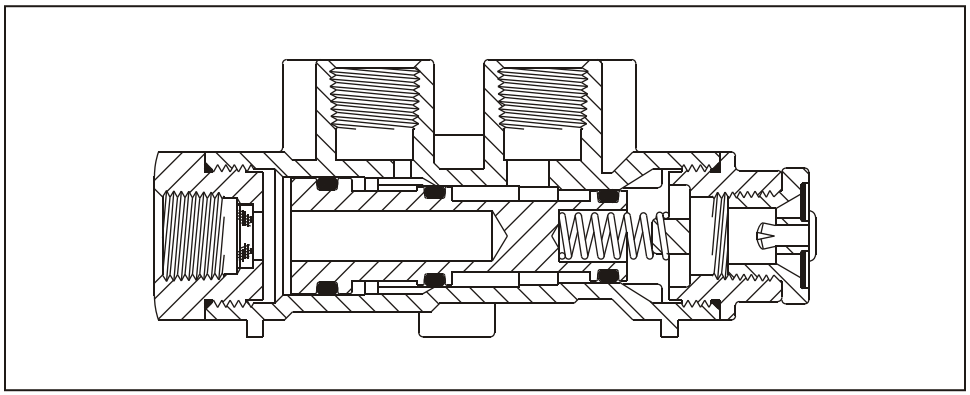

INFORMATION:

- Commonly used on trailers with one or more lift axles
- Pressurizing the lift axle air spring to lift the axle causes the 110591 to close the control port and exhausts the delivery port preventing the service brakes from applying while the axle is in the up position

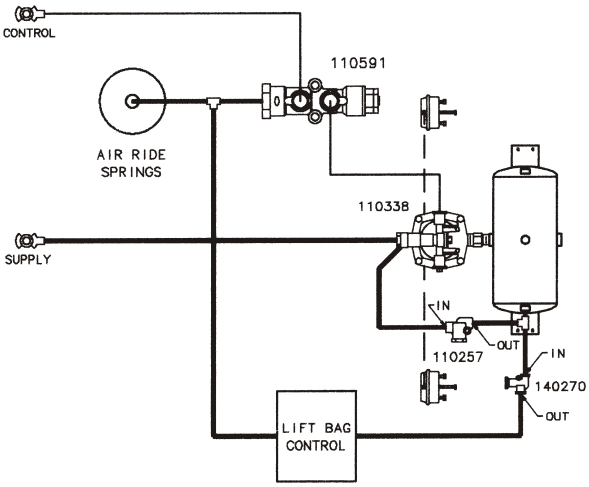

PART NUMBER	PORT SIZES (NPT)		
	Supply	Control	Delivery
110591	3/8"	3/8"	3/8"

MISCELLANEOUS VALVES
Line Filter

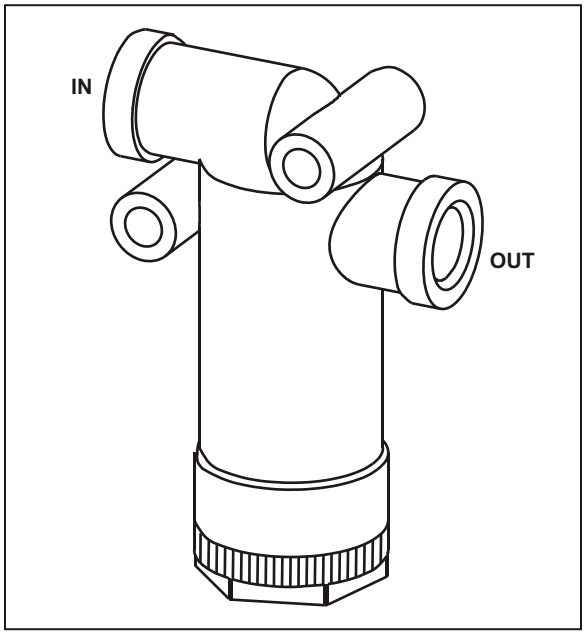

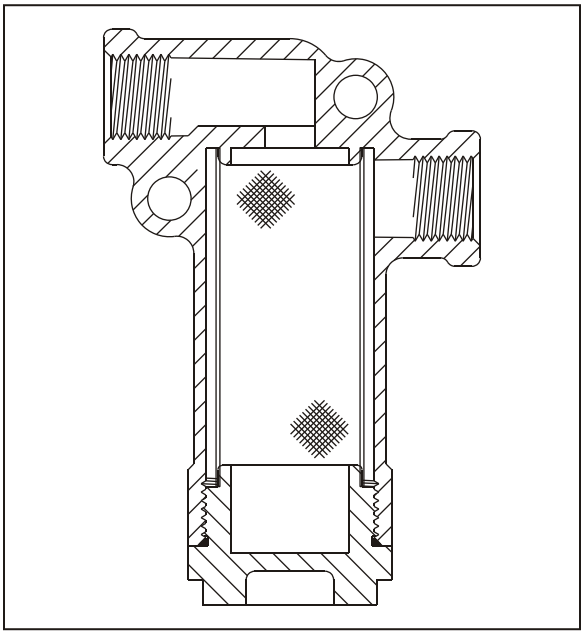

INFORMATION:

- Commonly used in trailer supply line ahead of Spring Brake Control Valve or Emergency Relay Valve
- Reduces supply line contamination to extend the life of other air valves in the system
- The internal filter has 8 square inches of filter area & is removable for cleaning purposes
- Line Filter may only be mounted vertically to insure proper operation
- Piping examples on pages 70, 71, 72, 73 & 74
- **PLUG UNIT ASSEMBLY 2550-5**
- **NOTE*: USE OF THIS LINE FILTER IN THE CONTROL LINE IS NOT RECOMMENDED***

PART NUMBER	PORT SIZES (NPT)	
	Inlet	Outlet
2550	3/8”	3/8”

MISCELLANEOUS VALVES
5 Port / 2 Way Valve - Manual

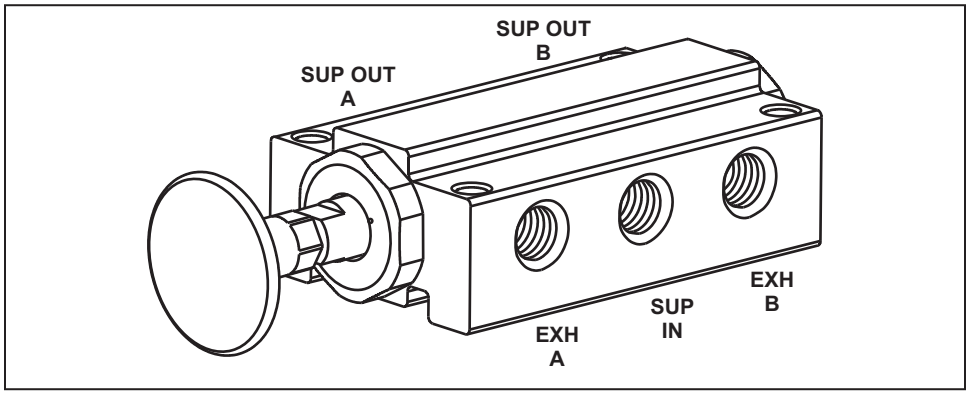

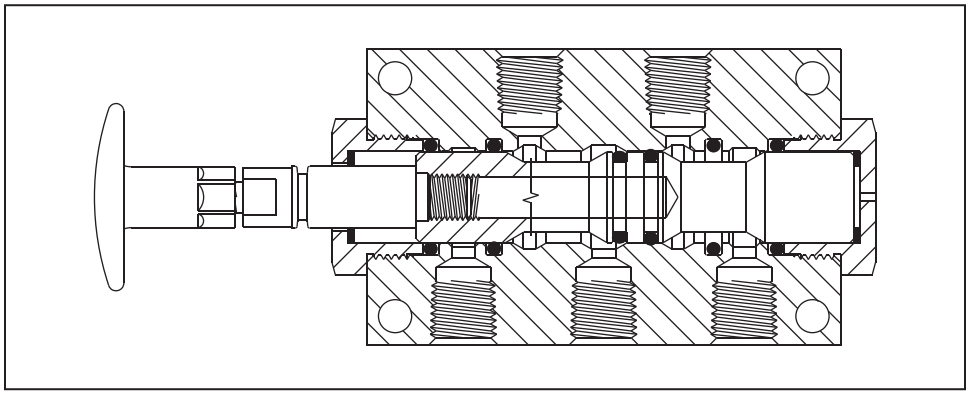

INFORMATION:

- Commonly used to operate lift axle control functions
- Commonly used to operate air cylinders for bottom dump gates
- Piping examples on page 75

PART NUMBER	PORT SIZES (NPT)		
	Supply In	Supply Out	Exhaust
110052	1/4"	1/4"	1/4"

Hand Control Valve – Automatic Closing

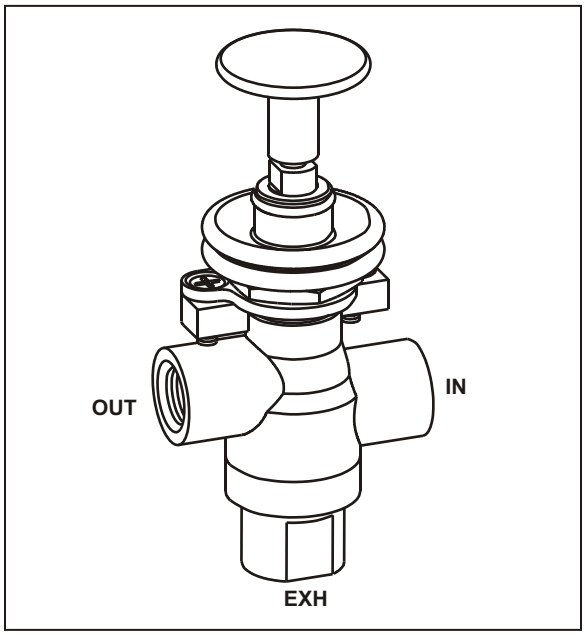

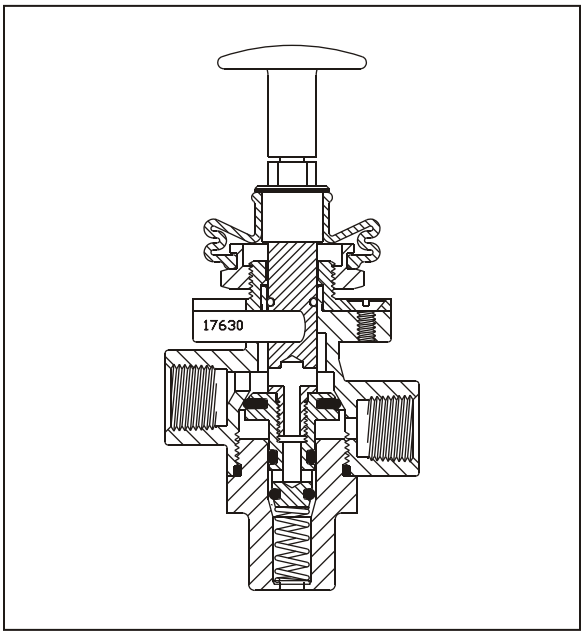

INFORMATION:

- Commonly used to operate 5th wheel cylinder
- Valve opened manually by holding knob in, automatically closes when force removed

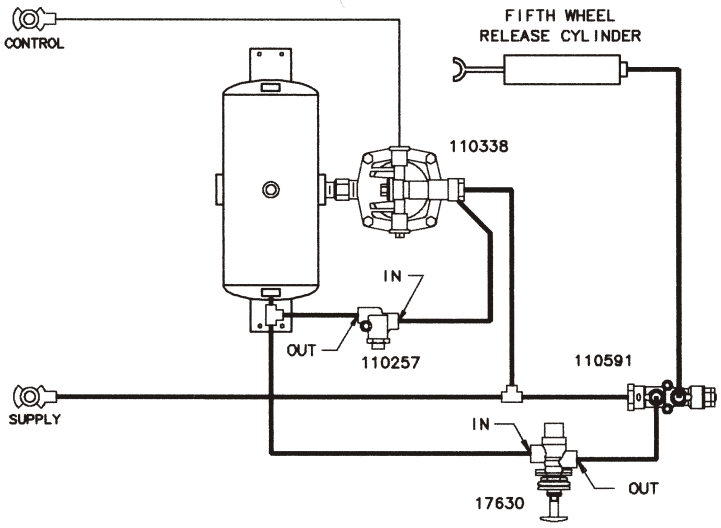

PART NUMBER	PORT SIZES (NPT)	
	Inlet	Outlet
17630	3/8”	3/8”

MISCELLANEOUS VALVES
Emergency Control Drawbar Valve

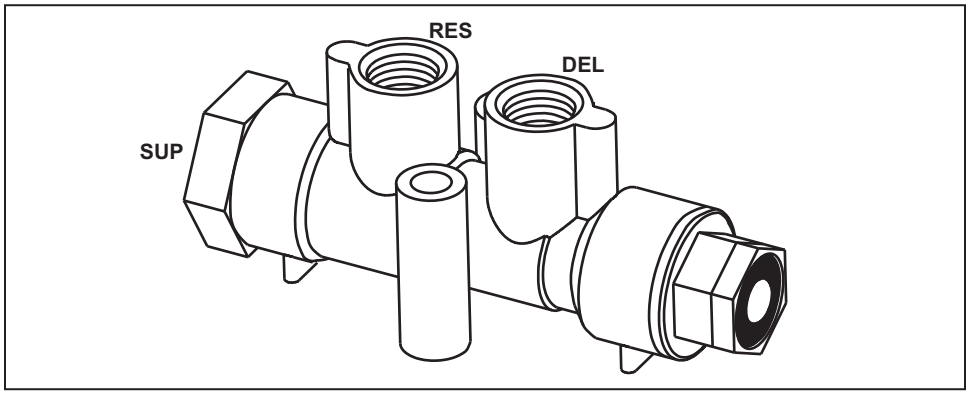

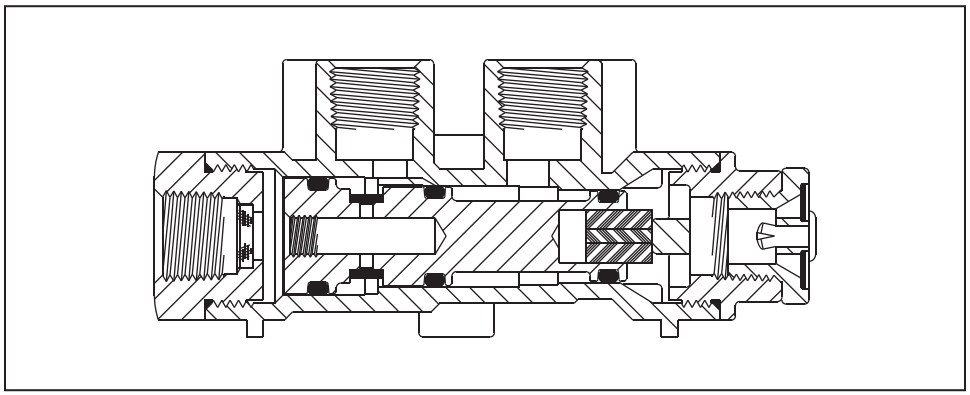

INFORMATION:

- Commonly used to operate a drawbar on transfer trailers

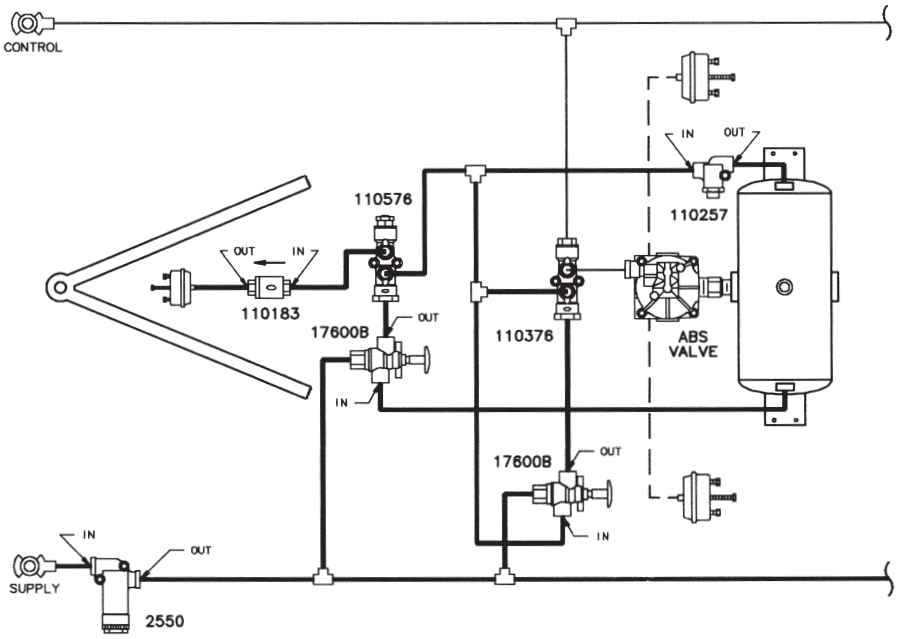

PART NUMBER	PORT SIZES (NPT)	
	Supply	Reservoir
110576	3/8"	3/8"

MISCELLANEOUS VALVES
Quick Release Valves

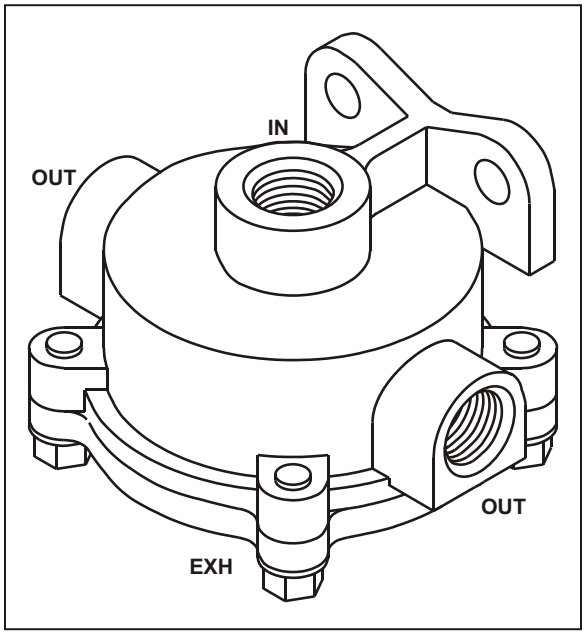

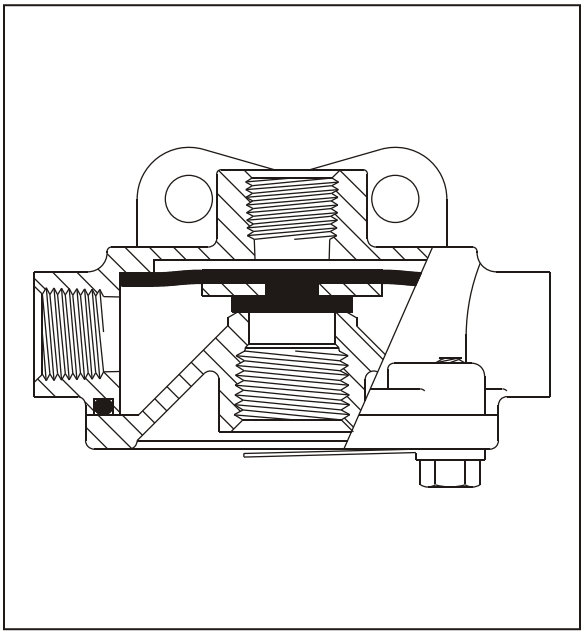

INFORMATION:

- Commonly used to apply & release spring brakes & service brakes
- Commonly used in control line of towing trailers to exhaust air suspension bags
- Heavy-duty metal construction

PART NUMBER	PORT SIZES (NPT)				NOMINAL CRACK PRESSURE	USE REPAIR KIT NUMBER
	Inlet	Outlet A	Outlet B	Exhaust		
2000B 3/8	3/8"	1/4"	1/4"	-	4-5 psi	20-5
2000B 1/2	1/2"	3/8"	3/8"	-	4-5 psi	20-5
2000C 3/8	3/8"	1/4"	1/4"	-	8-10 psi	20-5
2000C 1/2	1/2"	3/8"	3/8"	-	8-10 psi	20-5
2000D 3/8	3/8"	1/4"	1/4"	-	0-1 psi	20D-5
2000D 1/2	1/2"	3/8"	3/8"	-	0-1 psi	20D-5
200000	1/4"	1/4"	1/4"	-	0-1 psi	20D-5
200001	3/8"	3/8"	3/8"	1/2"	0-1 psi	20D-5
200002	1/2"	3/8"	3/8"	1/2"	0-1 psi	20D-5
200003	3/8"	1/4"	1/4"	1/2"	0-1 psi	20D-5
200004	3/8"	3/8"	3/8"	1/2"	0-1 psi	200135
200006	1/4"	1/4"	1/4"	1/2"	0-1 psi	20D-5

MISCELLANEOUS VALVES
Spring Brake Exhaust Valves

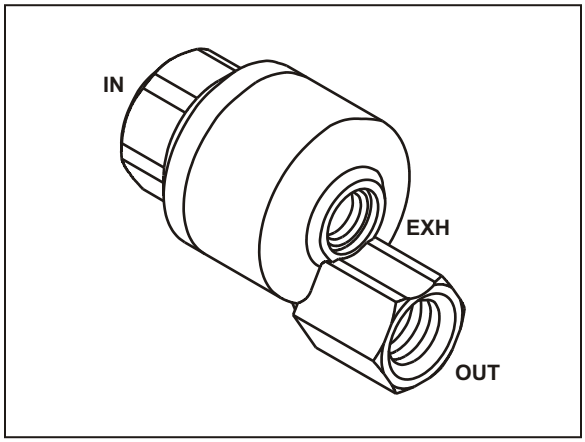

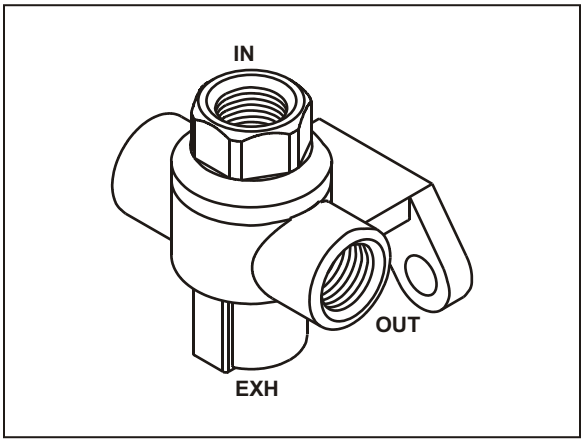

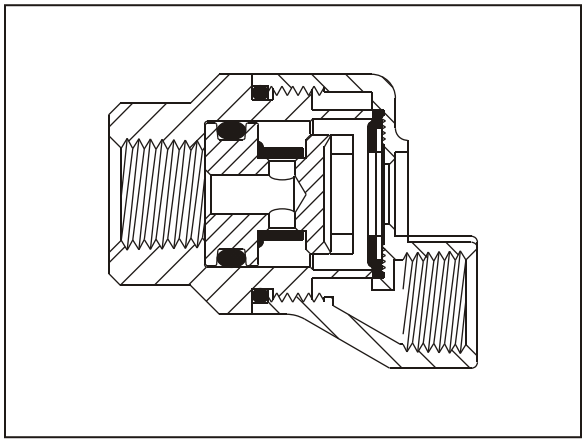

3800

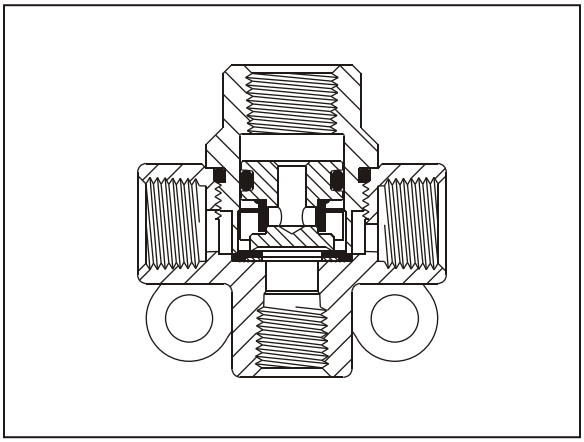

7800

INFORMATION:

- Pressure holding & quick release valve
- Operates as positive quick release valve on lift axle & spring brake applications
- Operates as a pressure holding valve to engage transfer trailer locks
- Prevents unwanted application of spring brakes due to drop in supply pressure
- In line mounting for the 3800 while the 7800 & 780210 act as a Tee & are frame mounted
- **REPAIR KIT 78-5**

PART NUMBER	PORT SIZES (NPT)		DIMENSIONS		COMMENTS
	Inlet	Outlet	Height	Width	
3800	1/4"	1/4"	1 15/16"	1 9/16"	In line mounting
7800	1/4"	1/4"	2 1/4"	2 1/4"	
780210	3/8"	3/8"	2 1/4"	2 1/4"	
780219	3/8"	3/8"	2 1/4"	2 1/4"	Includes exhaust seal

MISCELLANEOUS VALVES
Foot Valves – Dual Circuit

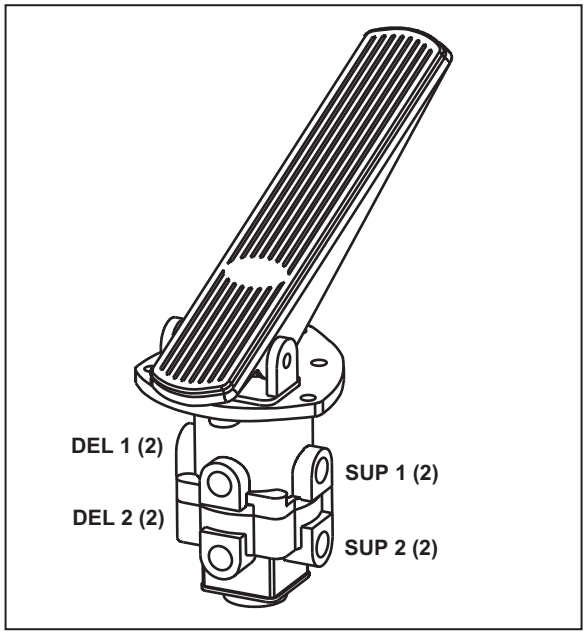

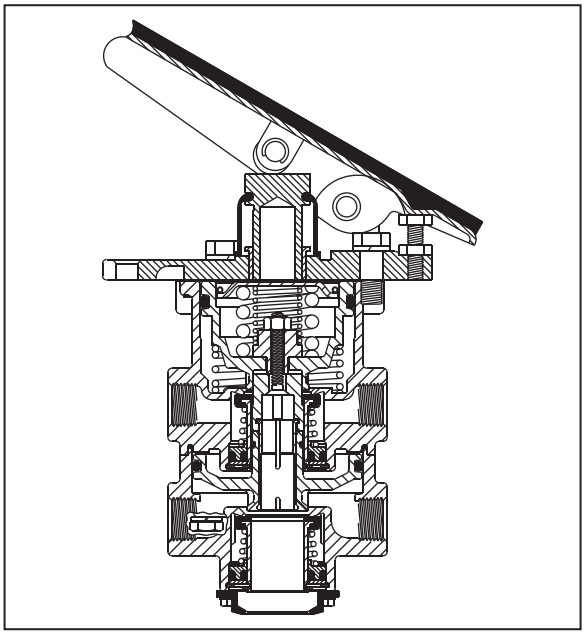

INFORMATION:

- Dual circuit foot valves contain two separate supply & delivery circuits allowing service brakes to remain operational on one or more tractor axle(s) & trailer axles if one reservoir fails
- Line for line replacement for Bendix E-6 No. 286171 or Midland Nos. KN22140 & KN22150
- **PLUG UNIT ASSEMBLY 110290**
- **MAJOR REPAIR KIT 110297**

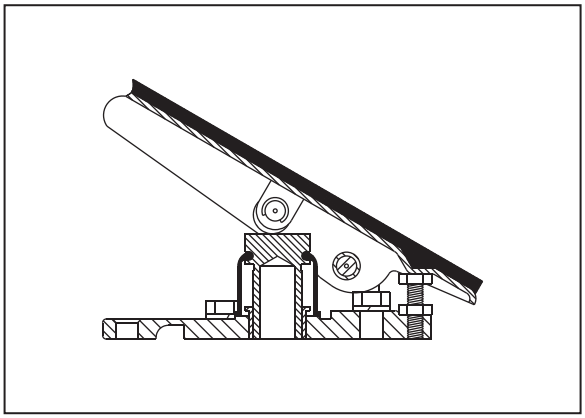

6125-7 Treadle Base Assembly
Used on both dual & single circuit valves

PART NUMBER	PORT SIZES (NPT)				TREADLE BASE ASSEMBLY	TREADLE ANGLE
	Supply 1 (2)	Supply 2 (2)	Delivery 1 (2)	Delivery 2 (2)		
110400	3/8"	3/8"	3/8"	3/8"	None	-
110425	3/8"	3/8"	3/8"	3/8"	6125-7	25°
110430	3/8"	3/8"	3/8"	3/8"	6125-7	30°
110435	3/8"	3/8"	3/8"	3/8"	6125-7	35°
110440	3/8"	3/8"	3/8"	3/8"	6125-7	40°
110445	3/8"	3/8"	3/8"	3/8"	6125-7	45°

MISCELLANEOUS VALVES
Foot Valves – Single Circuit

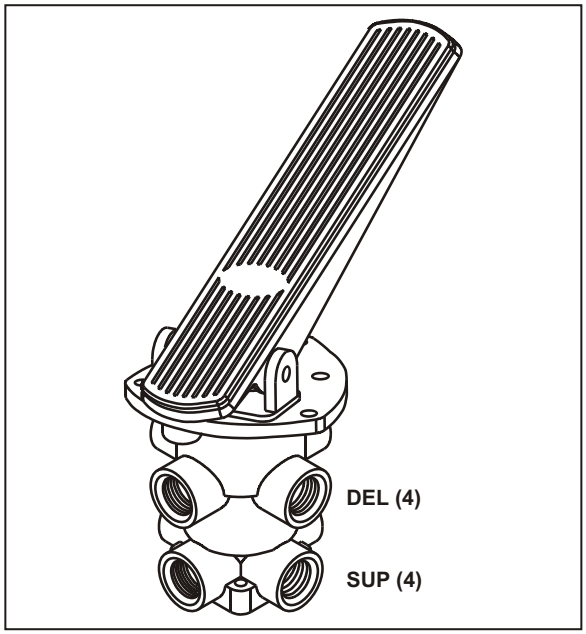

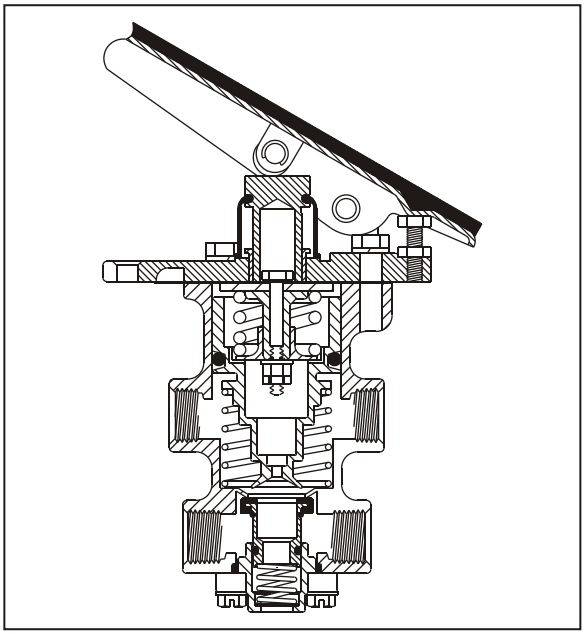

INFORMATION:

- Used to apply & release service brakes of tractor, truck & trailer
- **PLUG UNIT ASSEMBLY 6125-5**
- **MINOR REPAIR KIT 912-5**

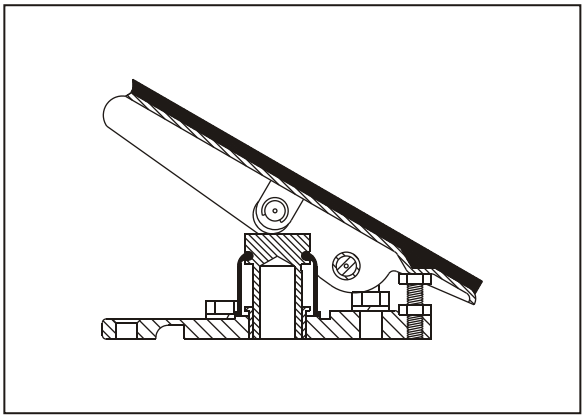

6125-7 Treadle Base Assembly
Used on both dual & single circuit valves

PART NUMBER	PORT SIZES (NPT)		TREADLE BASE ASSEMBLY	TREADLE ANGLE
	Supply (4)	Delivery (4)		
6125	1/2"	1/2"	6125-7	30°
6125-2	1/2"	1/2"	None	–
6125-25	1/2"	1/2"	6125-7	25°
6125-35	1/2"	1/2"	6125-7	35°
6125-40	1/2"	1/2"	6125-7	40°
6125-45	1/2"	1/2"	6125-7	45°

MISCELLANEOUS VALVES
Air Starter Valves

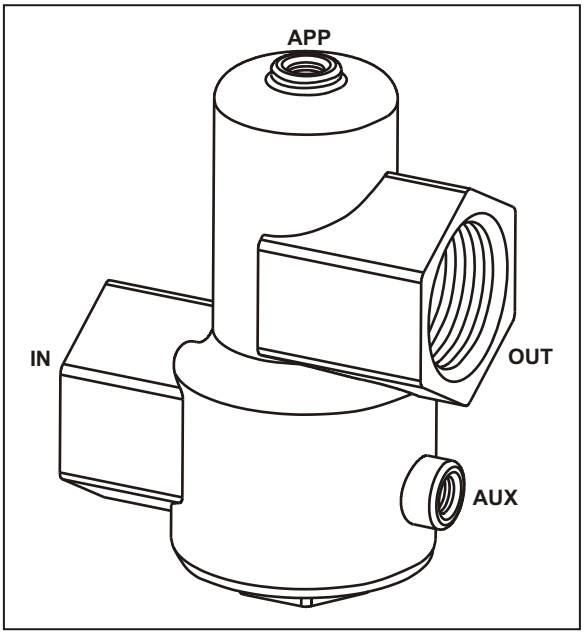

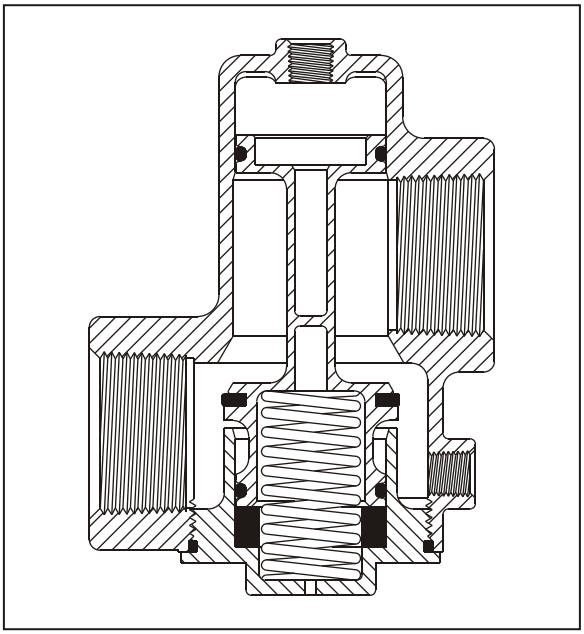

INFORMATION:

- No mounting holes in casting
- **REPAIR KIT 109-5** for Nitrile o-rings only
- **REPAIR KIT 110407** for Viton-rings only

PART NUMBER	PORT SIZES (NPT)				"A" DIMENSIONS	O-RING MATERIAL
	Inlet	Outlet	Application	Auxiliary		
10900	1 1/2"	1 1/2"	1/4"	Closed	4 11/16"	Nitrile
110250	1 1/2"	1 1/2"	1/4"	Open 1/4"	4 11/16"	Nitrile
110390	1 1/4"	1 1/4"	1/4"	Open 1/4"	4 11/16"	Viton

MISCELLANEOUS VALVES
Air Starter Valves

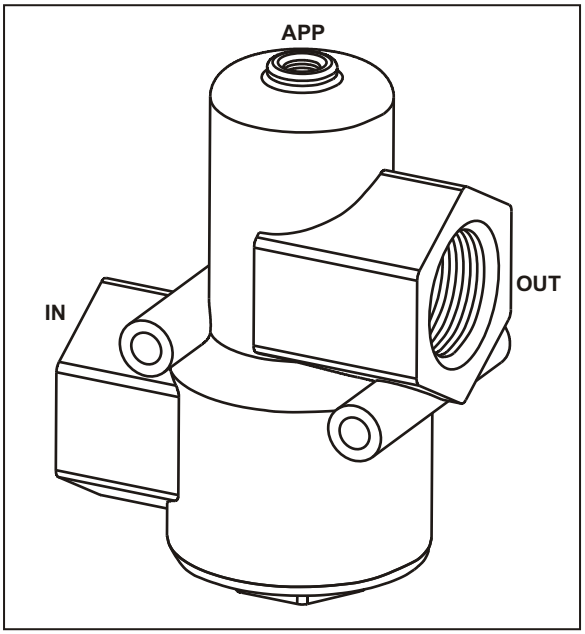

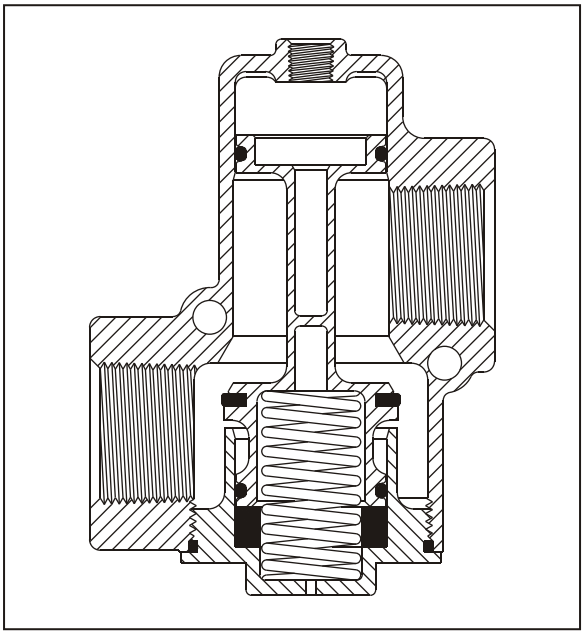

INFORMATION:

- Two mounting holes in casting
- **REPAIR KIT 109-5** for Nitrile o-rings only
- **REPAIR KIT 110407** for Viton o-rings only

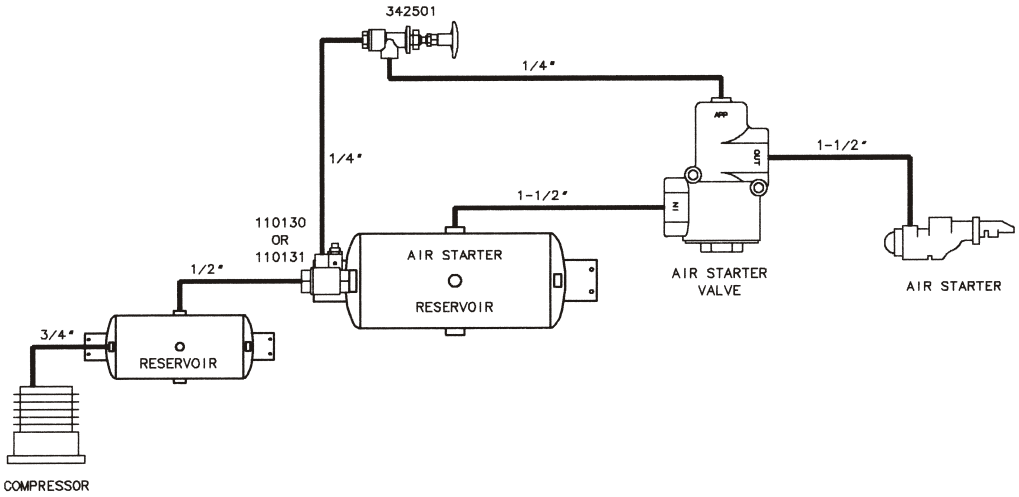

PART NUMBER	PORT SIZES (NPT)				"A" DIMENSIONS	O-RING MATERIAL
	Inlet	Outlet	Application	Auxiliary		
11900	1 1/2"	1 1/2"	1/4"	n/a	4 11/16"	Nitrile
14900	1 1/4"	1 1/4"	1/4"	n/a	4 5/16"	Nitrile
110486	1 1/2"	1 1/2"	1/4"	n/a	4 11/16"	Viton

MISCELLANEOUS VALVES
Air Starter Valve

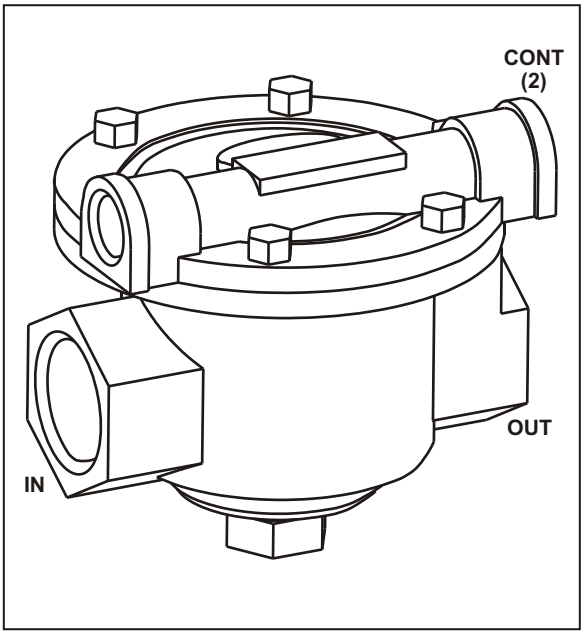

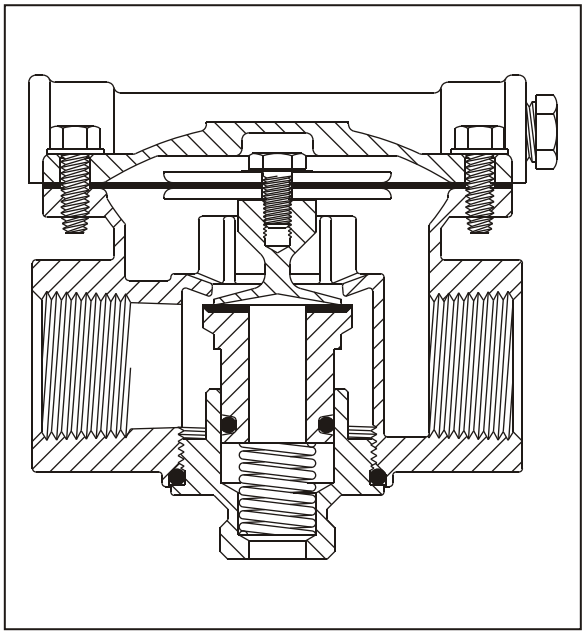

INFORMATION:

- **PLUG UNIT ASSEMBLY 6900-5**
- **REPAIR KIT 69-5**

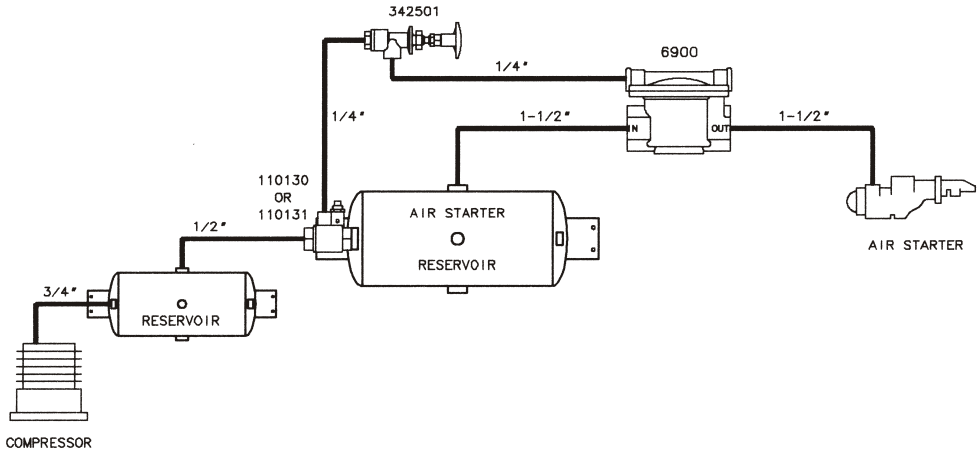

PART NUMBER	PORT SIZES (NPT)		
	Service/Control (2)	Inlet	Outlet
6900	1/4"	1"	1"

MISCELLANEOUS VALVES
Low Pressure Switches

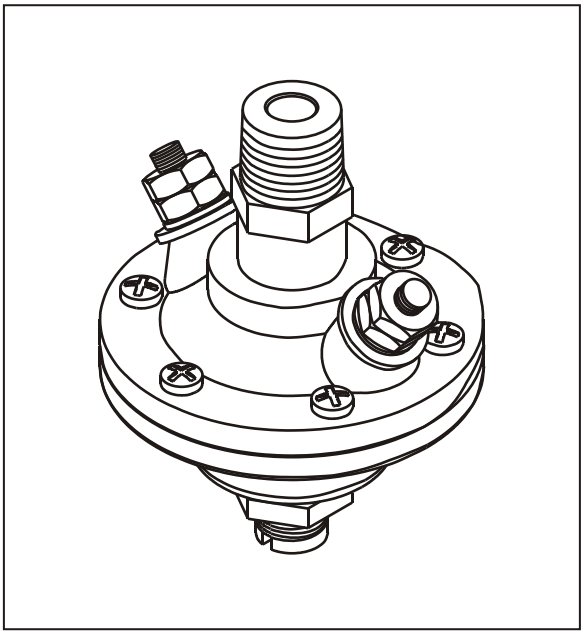

8000

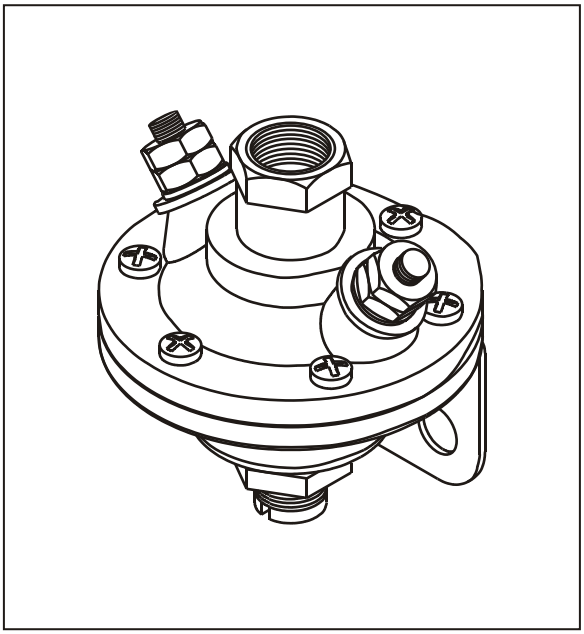

8000B

INFORMATION:

- Low Pressure Switches are designed to complete an electrical connection when the air pressure supplied to the switch falls below a certain air pressure setting
- Factory set at 60 psi
- Adjustment range 45 psi – 100 psi
- **REPAIR KIT 80-5**

PART NUMBER	FITTING	PORT	MOUNTING
8000	1/4" NPT	n/a	Nipple
8000B	None	1/8 - 27 NPSF	Bracket 820

MISCELLANEOUS VALVES
Stop Light Switches

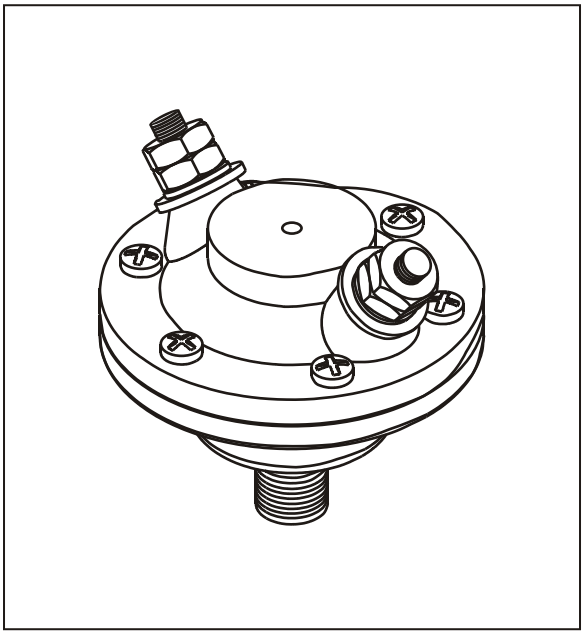

8100

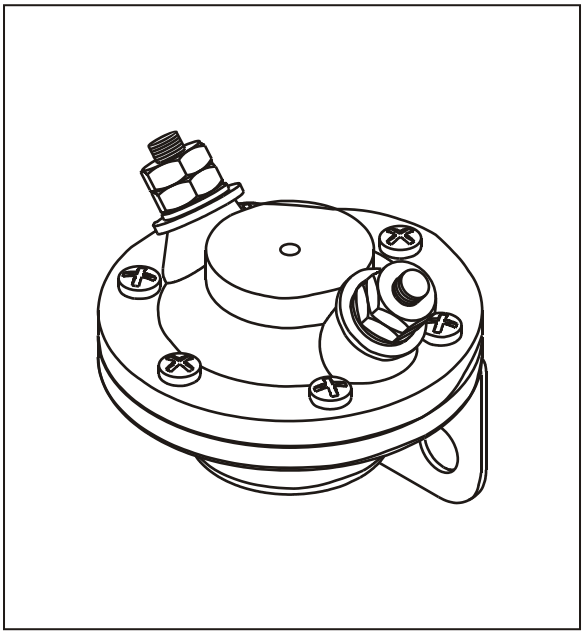

8100B

INFORMATION:

- Stop Light Switches are designed to complete an electrical connection to the stop lights when the air pressure supplied to the switch reaches approximately 2 psi
- **REPAIR KIT 81-5**

PART NUMBER	FITTING	PORT	MOUNTING
8100	1/4" NPT	n/a	Nipple
8100B	None	1/8 - 27 NPSF	Bracket 820

MISCELLANEOUS VALVES
Pressure Relief Valves

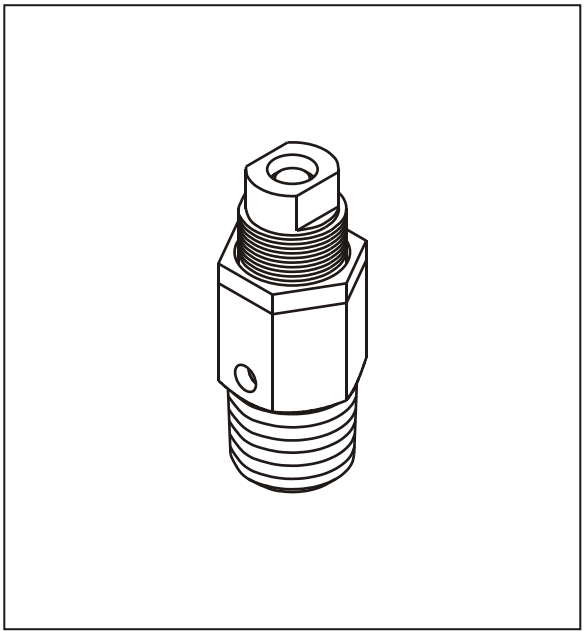

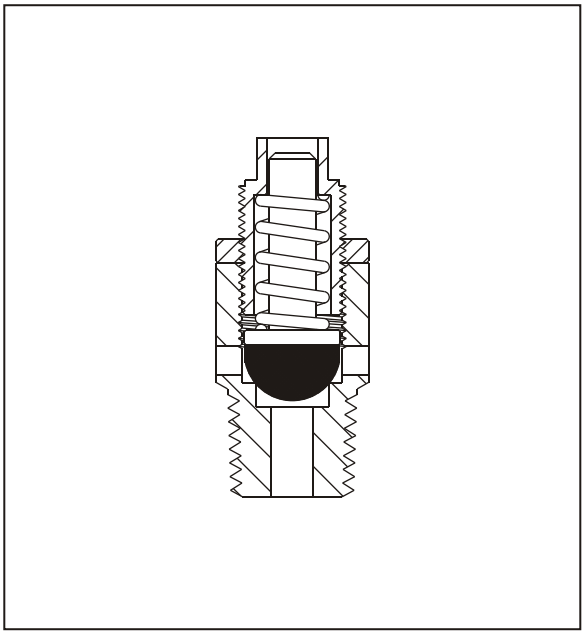

INFORMATION:

- Pressure Relief Valves are designed to open at a designated pressure thereby relieving air pressure buildup
- Part numbers 110127 & 110627 are commonly used on truck, tractor or bus air brake system reservoirs in the event that the governor fails to cut-out at the designated air pressure & are normally mounted on the reservoir

PART NUMBER	PORT SIZE	PRESSURE SETTING
110127	1/4"	Factory set at 150 psi
110399	1/4"	Factory set at 55 psi
110527	3/8"	Factory set at 175 psi
110601	1/4"	Factory set at 95 psi
110627	3/8"	Factory set at 150 psi

MISCELLANEOUS VALVES
Bypass Check Valves

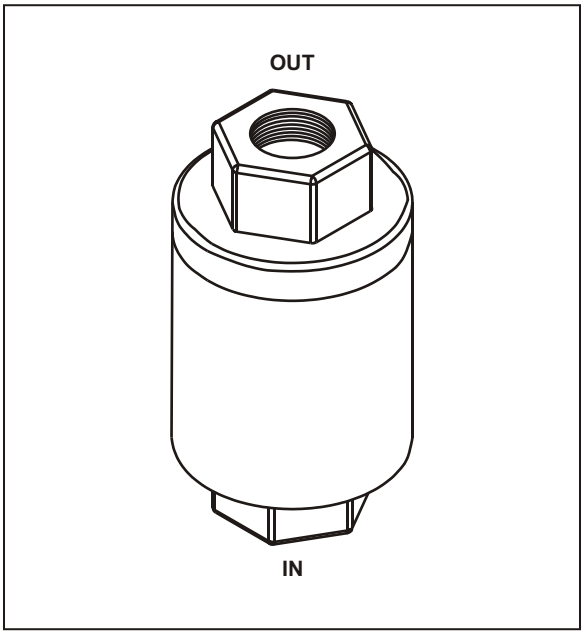

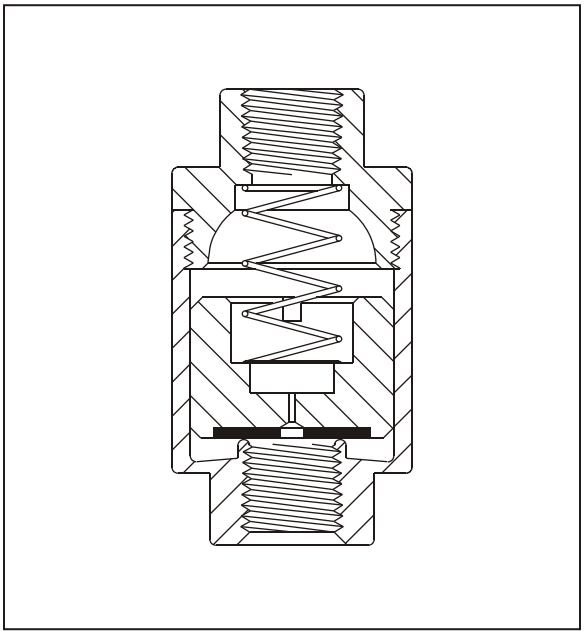

INFORMATION:

- Part number 110183 is commonly used to control the lowering of the drawbar in transfer trailer applications
- Bypass check valves will not replace standard check valves

PART NUMBER	PORT SIZE (NPT)	LENGTH	DIAMETER	ORIFICE SIZE
110183	1/4"	2 3/8"	1 1/4"	.028
220000	3/4"	3 3/8"	1 1/2"	.030
220100	1/4"	2 3/8"	1 1/4"	.062

MISCELLANEOUS VALVES
Combination Valves

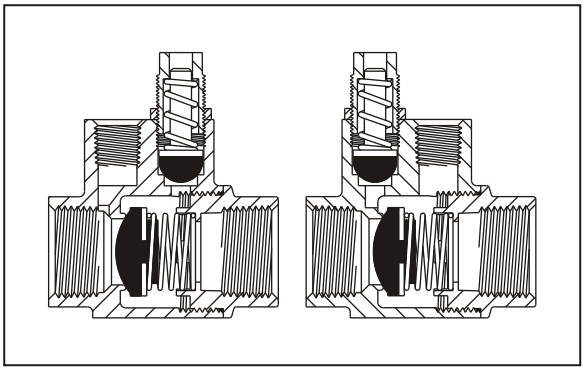

110128 & 110130

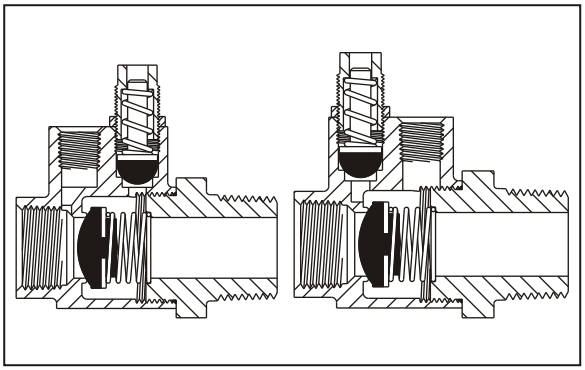

110129 & 110131

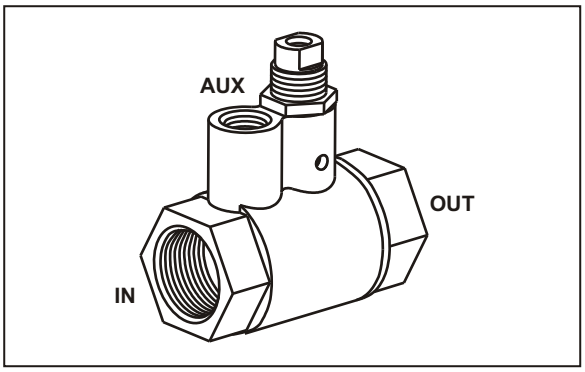

110128

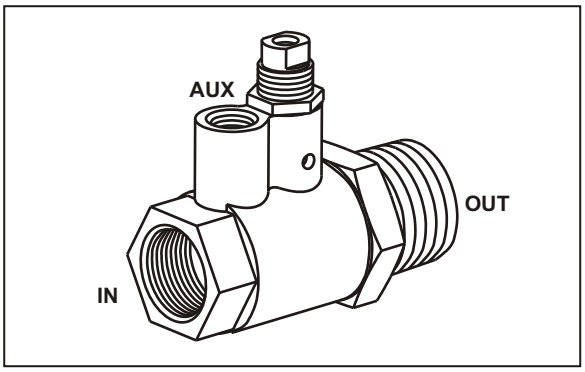

110129

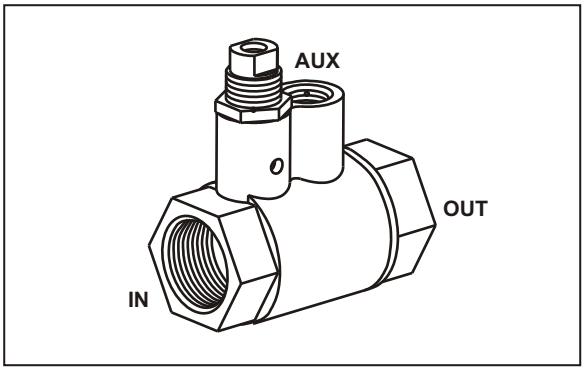

110130

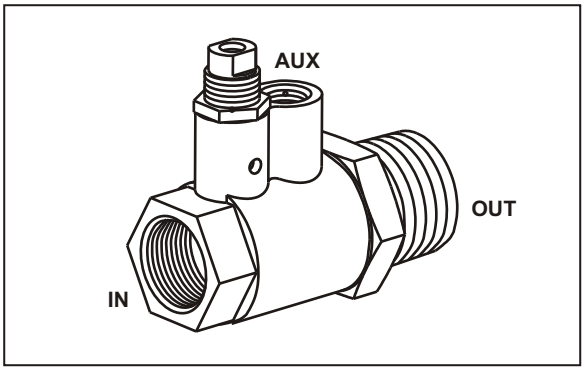

110131

- Commonly used on air starter systems
- Combination Valves act as a one-way check valve, pressure relief valve & manual drain

PART NUMBER	PORT SIZES (NPT)		
	Inlet	Outlet	Aux.
110128	3/4"	3/4"	1/4"
110129	3/4"	1"	1/4"
110130	3/4"	3/4"	1/4"
110131	3/4"	1"	1/4"

MISCELLANEOUS VALVES
Governor

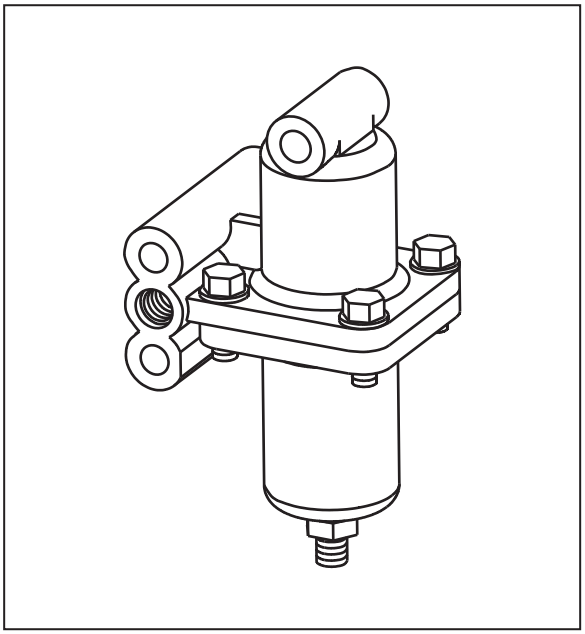

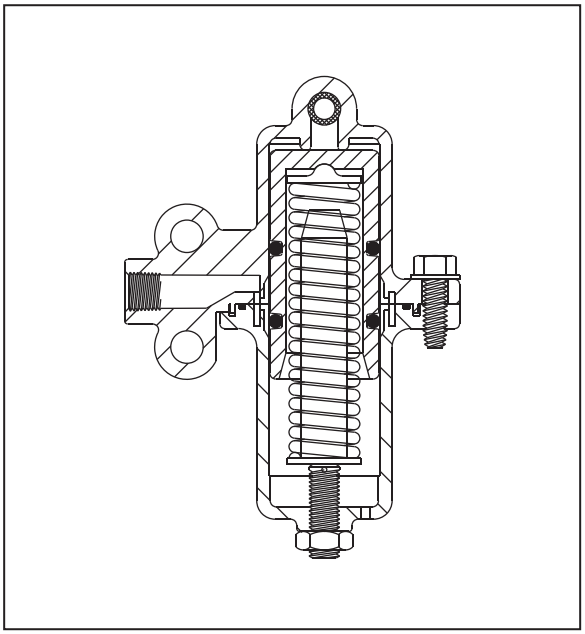

INFORMATION:

- Monitors the reservoir air pressure and instructs the air compressor when to activate and deactivate
- Cutout pressure is factory set at 120 psi
- Cut in pressure is set at 100 psi but is adjustable from 90 psi to 135 psi
- **REPAIR KIT 15-5**

PART NUMBER	PORT SIZES (NPT)	
	Reservoir (2)	Unloader (3)
1500	1/8"	1/8"

MISCELLANEOUS VALVES

Breakaway Valve – Tractor Protection Valve

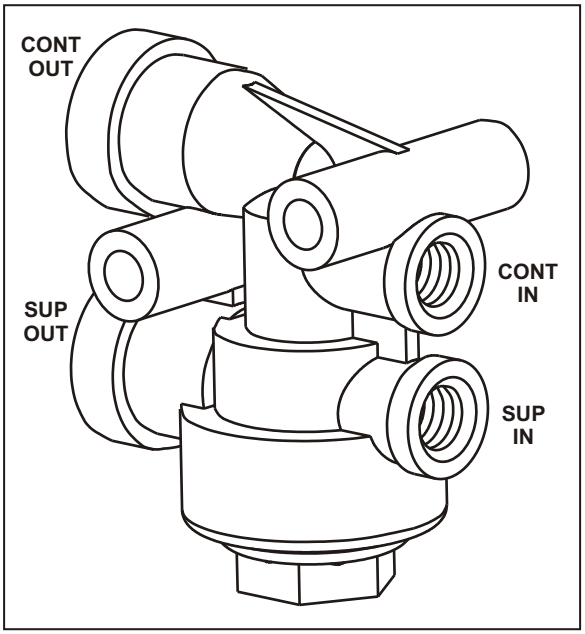

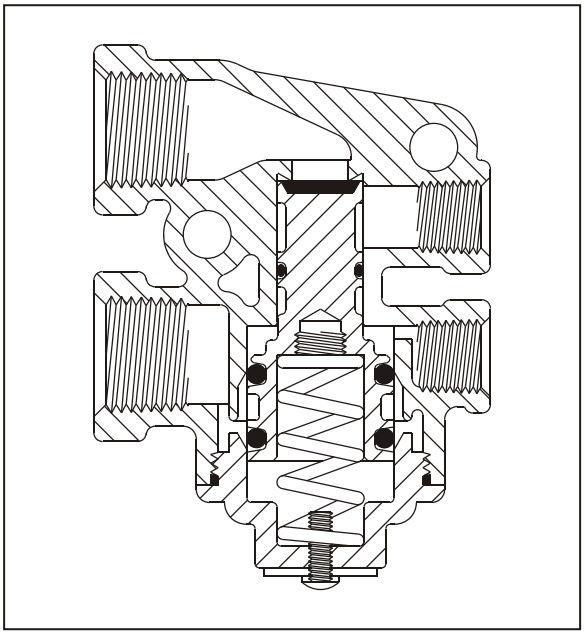

INFORMATION:

- Prevents the loss of tractor brakes in the event of a trailer breakaway
- Automatically applies between 45 psi and 20 psi
- **REPAIR KIT 77-5**

PART NUMBER	PORT SIZES (NPT)			
	Supply In	Supply Out	Control In	Control Out
7700	1/4"	1/2"	1/4"	1/2"

MISCELLANEOUS VALVES
Sludge Remover

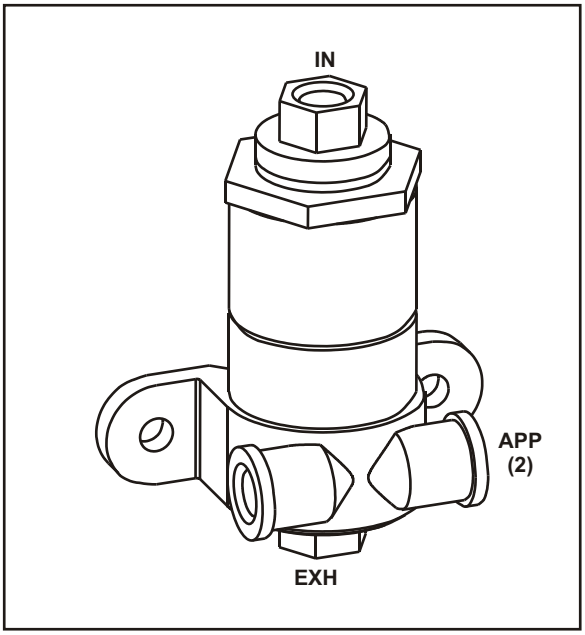

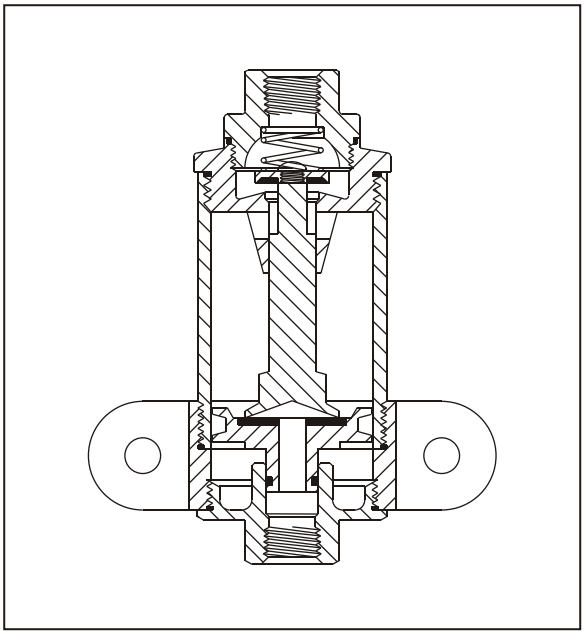

INFORMATION:

- When the compressor unloads, the Sludge Remover Valve opens & allows contamination to flow out of the bottom of the reservoir into the Sludge Remover
- As the compressor rebuilds air pressure, the loading line air pressure is lost & the Sludge Remover Valve exhausts the contamination to atmosphere
- Used in tractor and truck applications only
- **PLUG UNIT ASSEMBLY 6300-5**
- **MAJOR REPAIR KIT 663-5**
- **MINOR REPAIR KIT 63-5**
- **HEATER KIT 6300H**

PART NUMBER	PORT SIZES (NPT)		
	Inlet	Exhaust	Application (2)
6300	1/4"	1/4"	1/4"

MOUNTING HARDWARE

Heavy Duty Mounting Nipples

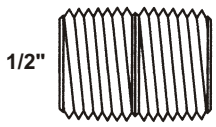

6002

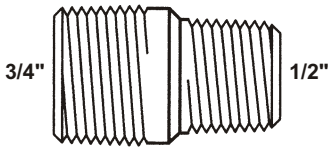

6003

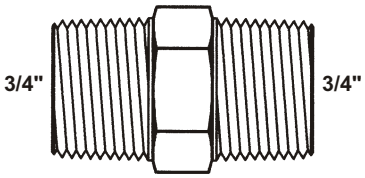

6006

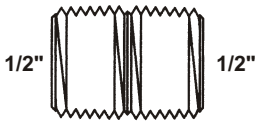

6011

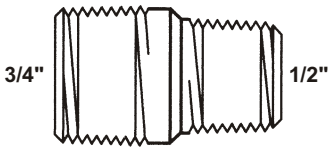

6010

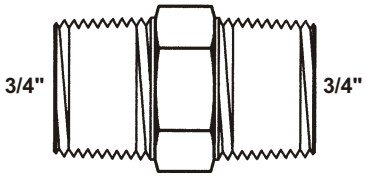

6012

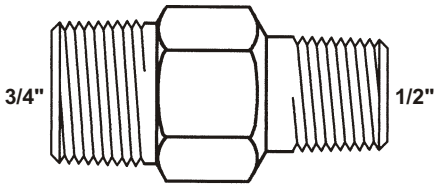

616

ALL THREADS NPT

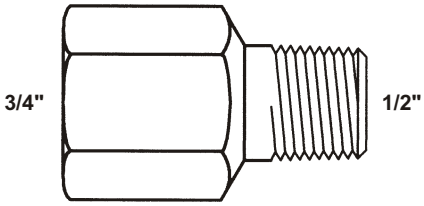

617

Sealco nipples are constructed of steel and plated with zinc and chromate for corrosion resistance

Flange Mounting Kits

ALL THREADS NPT

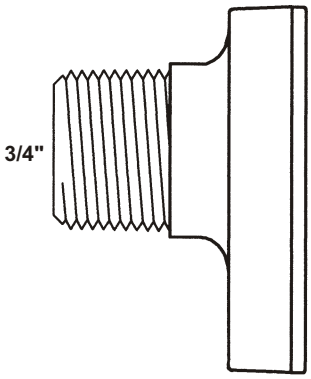

110238

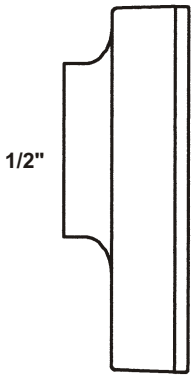

110285

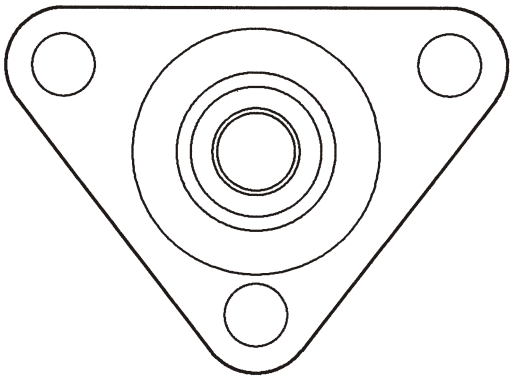

FACE ON VIEW

Flange Kits 0158H & 110285 are internally threaded. Flange Kits 110238 & 110285 include a washer.

Frame Mounting Kits

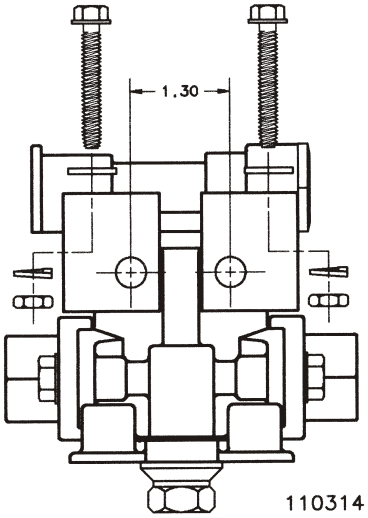

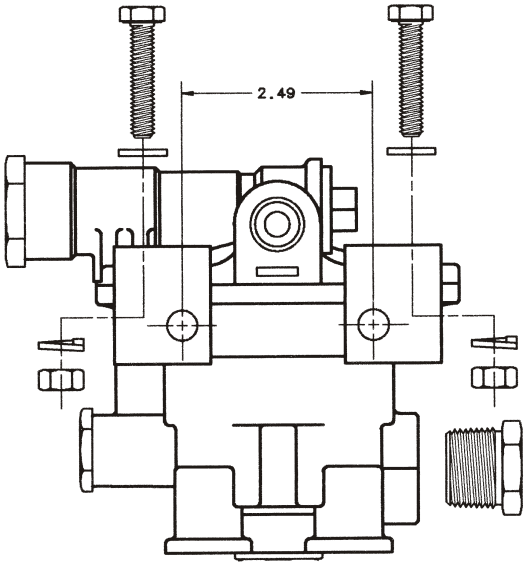

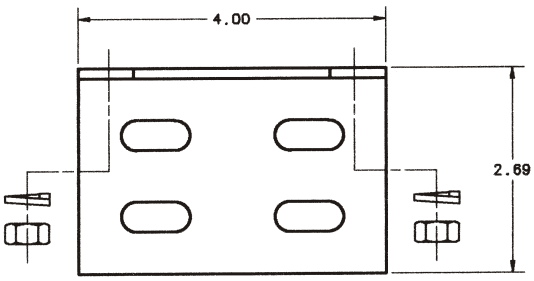

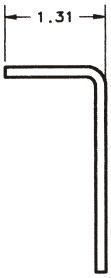

Frame Mounting "T" **Part Number 780212**

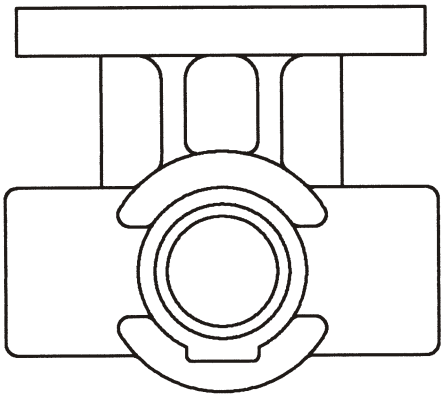

ALL 3/8" NPT

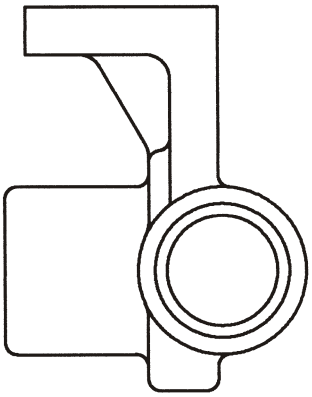

Interchanges with Bendix P/N 236056

VALVE INTERCHANGE PART NUMBERS

SEALCO		REPLACES COMPETITORS VALVES					
		BENDIX	BERG	MIDLAND	TRAMEC	WAGNER	WILLIAMS
RELAY EMERGENCY							
Charging	**A-1000S**	RE-4	11675	KN30000		AF71890	WM-101
	110200	229434	12350	KN30010		A99036	
	110205	277446		N-3714			
	110460	RE-6					
	110470	281865		KN30300			
	110475	281860		KN30400			
Non-Charging	**110338**	RE-6NC		KN30200		AF71891	
		102168				AF71892	
SERVICE RELAY				RG5			
Two Port - Trailer				KN28550			
				KN28551			
	***110410**			RG2			
	110197		12346	KN28510	51442	AE78889	
* add 110395 bracket for frame mount			12341			A80070	
Four Port - Trailer							
	****110415**	R-12				RS2	
	110139	102626	12345	A103600	51444	*A85490	
	110450	65104	12343	A86477		RG4	
	110600	R-6				*A97600	
* add 140270 to air system		279952					
** 110395 bracket for frame mount		280651					
Truck or Tractor							
4 port	**110416**	R-5	12344	KN28060	51445	AE78880	
2 port	**110412**	229467		KN28140		AE78887	
3 port	**9125**	R-6		KN28500		AE78889	
		279180		KN28510			
		R-8		KN28520			
		286370					
		R-12					
		102626					
CONTROL LINE		R-12P					
Trailer Applications		109001		KN28300	51401		WM-320
	110580	109002			51402		
		065476					
		109264					
Dolly Applications		R-12P					
		109001					
		109002					
	110570	065476					
		109264					
		R-8P			51401		
		287114		KN28300	51402		WM-320

VALVE INTERCHANGE PART NUMBERS

SEALCO	REPLACES COMPETITORS VALVES					
	BENDIX	BERG	MIDLAND	TRAMEC	WAGNER	WILLIAMS
COMBINATION RELAY & SPRING BRAKE CONTROL			FFV			
			FF2			
			KN28600			
110742			KN28601			
110744			KN28602			
			KN28603			
SPRING BRAKE CONTROL						
"Protected Reservoir"						
110170	SR-2					
110147	287376	12360				
	102761	12361				
	103061					
	*SR-4					
	*101112					
* **add 140270 to air system**	*101622					
110171			RT4		RT	
			KN26010		AF88802	
			KN26020		AF88812	
110191			RT4		RT-2	
			KN26010		A98730	
			KN26020		A99370	
					RK	
					AE83336	
					AE83335	
"Spring Brake Priority"	SR-5			TEV		
	065437			51301		
110500	065438					
110800	065439					
	065440					
"Service Reservoir Priority"				STEV		
110700				51321		
DUAL FOOT VALVE						
110400	E-6		KN22140			
	286171		KN22150			
	E-9					
	E-10					
QUICK RELEASE						
	229859		KN32005			
200001	229860		KN32011			
200002 (2000D 1/2)	229813	1602				WM-314B
200003 (2000D 3/4)	281024					
200004 (2000D 1/4)						

OBSOLETE / SUPERCEDED PART NUMBERS

Part No.	Description
29-5	OBSOLETE
37-5	OBSOLETE
61-5	OBSOLETE
91-5	OBSOLETE
621	OBSOLETE
622	OBSOLETE
A1000F	OBSOLETE - USE A1000S & 1007
A1000SF	OBSOLETE - USE A1000S & 616
A1000SFM	OBSOLETE - USE A1000S & 617
A1000T	OBSOLETE
1000-8	OBSOLETE
A1100	OBSOLETE
6125-2X	OBSOLETE - USE 6125-2
6125H	OBSOLETE
6125X	OBSOLETE - USE 6125
8100V	OBSOLETE
9125-1/4	OBSOLETE - USE 9125
9125-1/4X	OBSOLETE - USE 9125X
9125-3/8	OBSOLETE - USE 9125
9125-3/8X	OBSOLETE - USE 9125X
17300	OBSOLETE
17600-2	OBSOLETE - USE 17600-2B
102003	OBSOLETE
110123	OBSOLETE - USE 110158
110133	OBSOLETE
110147	OBSOLETE - USE 110170
110147X	OBSOLETE - USE 110170X
110148	OBSOLETE - USE 110170 & 616
110148X	OBSOLETE - USE 110170X & 616
110155	OBSOLETE - USE 110228
110186	OBSOLETE
110188	OBSOLETE
110199X	OBSOLETE - USE 110199
110207X	OBSOLETE - USE 110207
110228X	OBSOLETE - USE 110228
110264	OBSOLETE
110267	OBSOLETE - USE 110338
110267X	OBSOLETE - USE 110338X
110268	OBSOLETE - USE 110470
110268X	OBSOLETE - USE 110470X
110275X	OBSOLETE - USE 110275
110306	OBSOLETE

Part No.	Description
110350	OBSOLETE
110370	OBSOLETE - USE 110570
110370X	OBSOLETE - USE 110570X
110375	OBSOLETE - USE 110690
110375X	OBSOLETE - USE 110690X
110382	OBSOLETE
110405	OBSOLETE
110425X	OBSOLETE - USE 110425
110430X	OBSOLETE - USE 110430
110435X	OBSOLETE - USE 110435
110440X	OBSOLETE - USE 110440
110445X	OBSOLETE - USE 110445
110459X	OBSOLETE - USE 110459
110460X	OBSOLETE - USE 110460
110463	OBSOLETE - USE 110365
110464	OBSOLETE - USE 110365
110465	OBSOLETE - USE 110143
110505X	OBSOLETE - USE 110505
110507X	OBSOLETE - USE 110507
110510X	OBSOLETE - USE 110510
110584X	OBSOLETE - USE 110584
110585	OBSOLETE
110600X	OBSOLETE - USE 110600
110611	OBSOLETE
111170	OBSOLETE - USE 110170
111170X	OBSOLETE - USE 11017X
111180	OBSOLETE - USE 110170 & 6002
111180X	OBSOLETE - USE 110170 & 6002
111190	OBSOLETE - USE 110170 & 6003
111190X	OBSOLETE - USE 110170 & 6003
111191	OBSOLETE - USE 110191
111191X	OBSOLETE - USE 110191
111192	OBSOLETE - USE 110191 & 6002
111192X	OBSOLETE - USE 110191 & 6002
111193	OBSOLETE - USE 110191 & 6003
111193X	OBSOLETE - USE 110191 & 6003
111230	OBSOLETE - USE 110171 & 6002
111230X	OBSOLETE - USE 110171 & 6002
111305	OBSOLETE - USE 110171 & 6003
111305X	OBSOLETE - USE 110171 & 6003
200004	OBSOLETE - USE 200006
720000	OBSOLETE

WEIGHT CHART

Part No.	- Lbs.	Part No.	- Lbs.	Part No.	- Lbs.	Part No.	- Lbs.
616	- .25	8000B	- .39	110228	- 3.31	110582	- 2.48
617	- .30	8100B	- .34	110250	- 4.74	110584	- 3.95
A1000S	- 5.60	9125	- 3.23	110252	- .89	110587	- 1.17
1300	- .53	9400	- 2.18	110257	- .50	110588	- 2.48
1300-45	- .55	10200 3/8	- .49	110258	- .50	110591	- 1.18
1300-80	- .54	10200 1/2	- .46	110274	- .89	110595	- 3.06
1500	- 1.02	10200 3/4	- .45	110275	- 2.91	110597	- 2.60
2000B 3/8	- 1.30	10900	- 4.77	110284	- .80	110600	- 3.79
2000B 1/2	- 1.33	11900	- 4.77	110300	- .32	110605	- 2.95
2000C 3/8	- 1.31	14900	- 2.98	110301	- .32	110606	- 2.46
2000C 1/2	- 1.32	17600	- .82	110310	- 3.82	110615	- 1.81
2000D 3/8	- 1.26	17600B	- .83	110315	- 3.82	110620	- 1.22
2000D 1/2	- 1.28	17600B-2	- .77	110338	- 5.61	110627	- .14
2200 1/4	- .30	17600L	- .92	110360	- 2.58	110644	- .80
2200 1/2	- .73	17600LB	- .92	110365	- 3.06	110657	- .48
2200 3/4	- .63	17600LG	- .89	110376	- 1.15	110690	- 2.96
2550	- .66	17600LR	- .89	110380	- 2.88	110700	- 2.16
3100	- 2.41	17600M	- .83	110384	- 8.31	110742	- 6.10
3200	- .46	17610	- .87	110385	- 3.48	110744	- 6.02
3200 1/4	- .46	21600	- .33	110390	- 3.06	110790	- 2.94
3450G	- .30	21600-2	- .29	110400	- 4.03	110800	- 2.13
3450S	- .30	21600D	- .33	110410	- 2.56	110842	- 6.08
3800	- .32	A25600	- .83	110412	- 3.10	110844	- 6.00
5200	- .50	A25600-2	- .77	110413	- .33	140200	- .41
5400	- 2.21	A25600Y	- .82	110415	- 2.96	140270	- .41
5900	- 2.41	99600	- .74	110416	- 3.44	140280	- .41
5900-1	- 1.82	99600-2	- .69	110425	- 6.18	140290	- .41
5900B	- 2.37	99600B	- .75	110430	- 6.20	140300	- .44
5900G	- 2.49	102001	- .45	110435	- 6.21	140370	- .44
5900GI	- 2.48	110103	- .27	110440	- 6.23	140380	- .44
5900L	- 2.75	110114	- .80	110445	- 6.26	140390	- .44
5900R	- 1.98	110127	- .12	110450	- 3.93	200000	- 1.27
6002	- .07	110128	- .61	110459	- 5.60	200001	- 1.29
6003	- .21	110129	- .88	110460	- 5.48	200002	- 1.27
6006	- .20	110130	- .64	110470	- 5.50	200003	- 1.25
6010	- .21	110131	- .91	110475	- 5.60	200004	- 1.28
6011	- .07	110139	- 3.92	110487	- 2.15	200006	- 1.26
6012	- .20	110167	- .30	110500	- 1.36	216050	- .32
6125	- 5.21	110170	- 3.82	110505	- 1.42	216200	- .33
6125-2	- 3.03	110171	- 3.84	110507	- 2.64	220000	- .62
6125-25	- 5.21	110183	- .30	110510	- 1.42	220100	- .30
6125-35	- 5.21	110189	- .75	110512	- .89	320100	- .61
6125-40	- 5.21	110191	- 3.84	110528	- .89	340250	- .27
6125-45	- 5.21	110197	- 2.62	110542	- 5.32	340350	- .26
6300	- 1.64	110198	- 2.69	110544	- 5.20	342501	- .25
6900	- 3.02	110199	- 2.83	110555	- .80	342502	- .25
7200	- .69	110200	- 5.54	110570	- 3.46	780210	- .56
7700	- 1.18	110205	- 5.50	110571	- 2.48	780219	- .56
7800	- .60	110207	- 3.22	110575	- 3.97	940000	- 2.18
8000	- .40	110221	- .75	110580	- 3.44	996555	- 1.05

TROUBLESHOOTING GUIDE
Trailer Emergency / Supply For 121 System

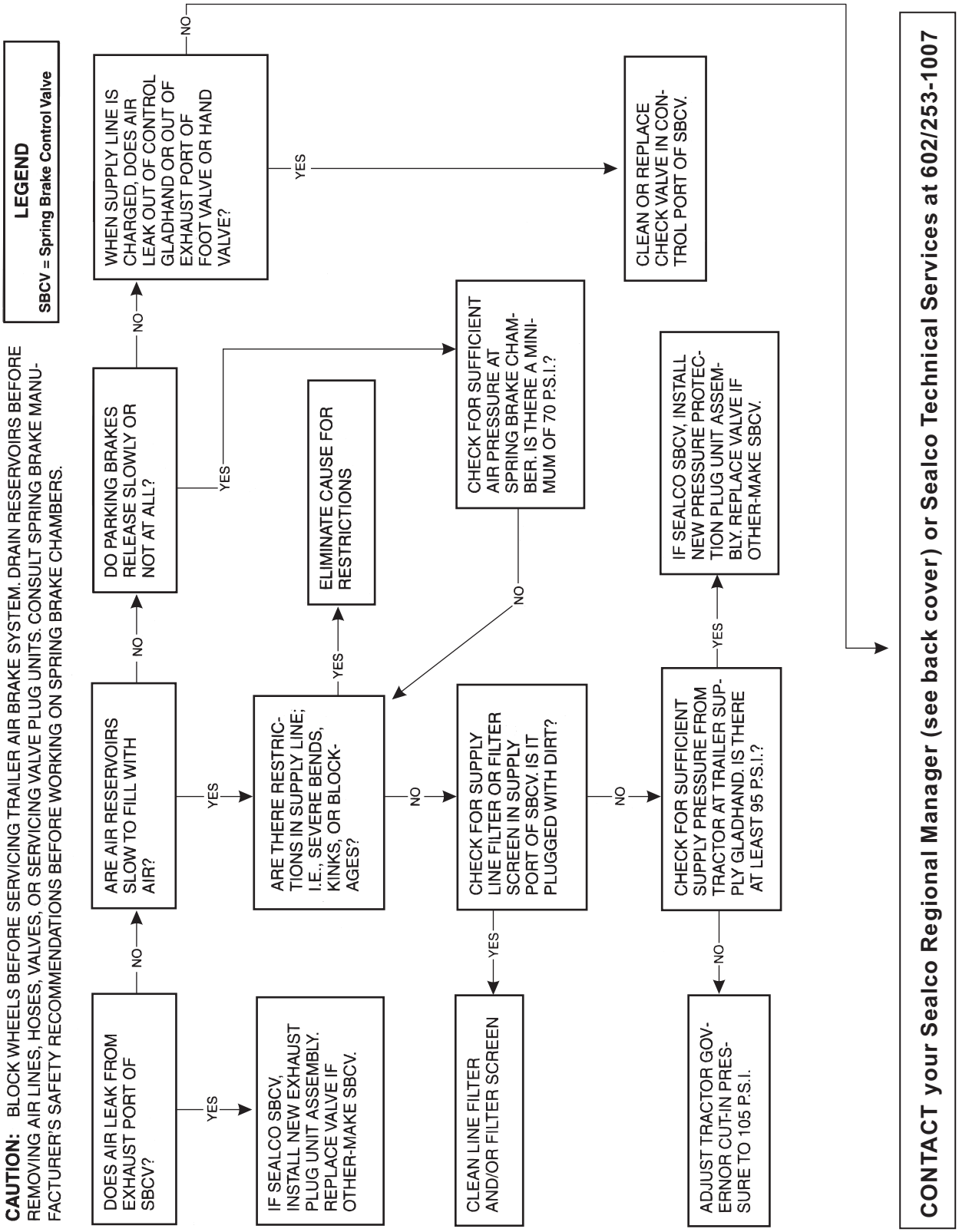

TROUBLESHOOTING GUIDE
Trailer Service / Control For 121 System

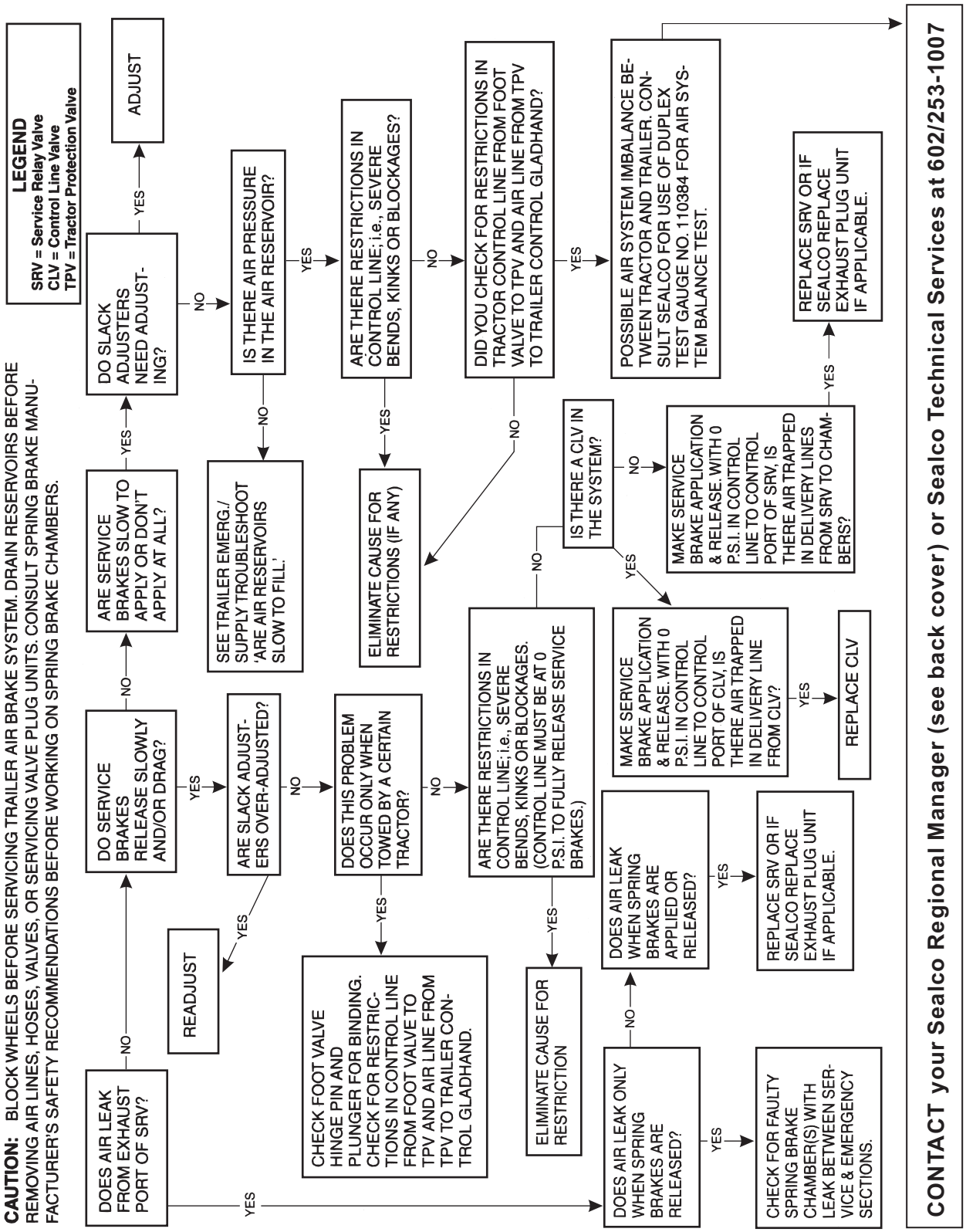

Tandem Axle Trailer (Pre FMVSS 121)

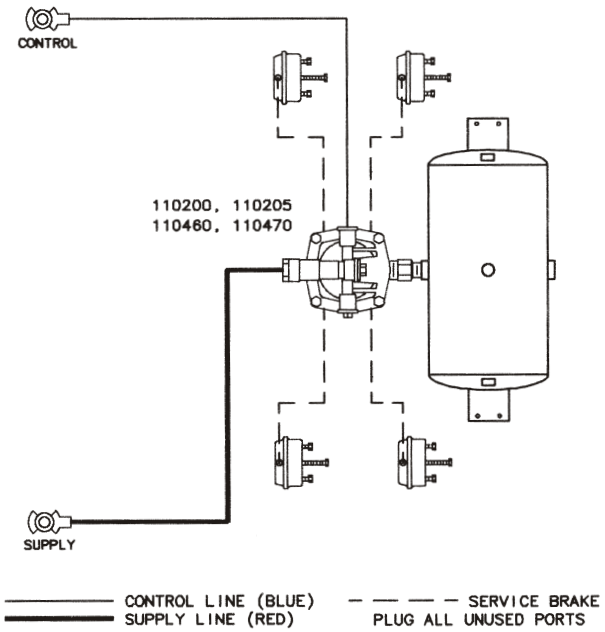

Tandem Axle Trailer with Spring Brakes (Pre FMVSS 121)

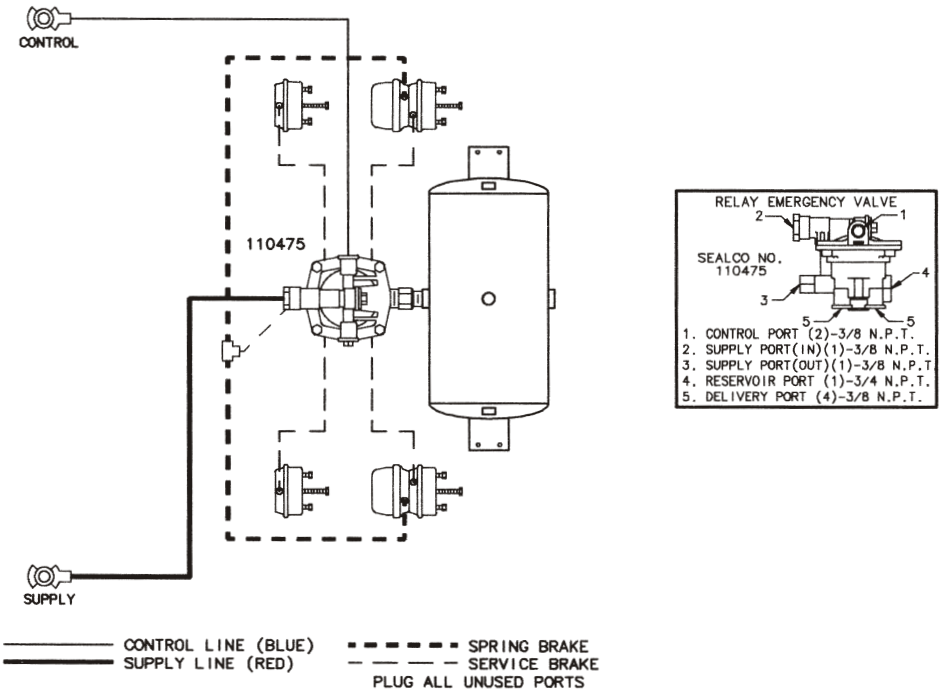

Tandem Axle Trailer (2 Tanks / 3 Valves)

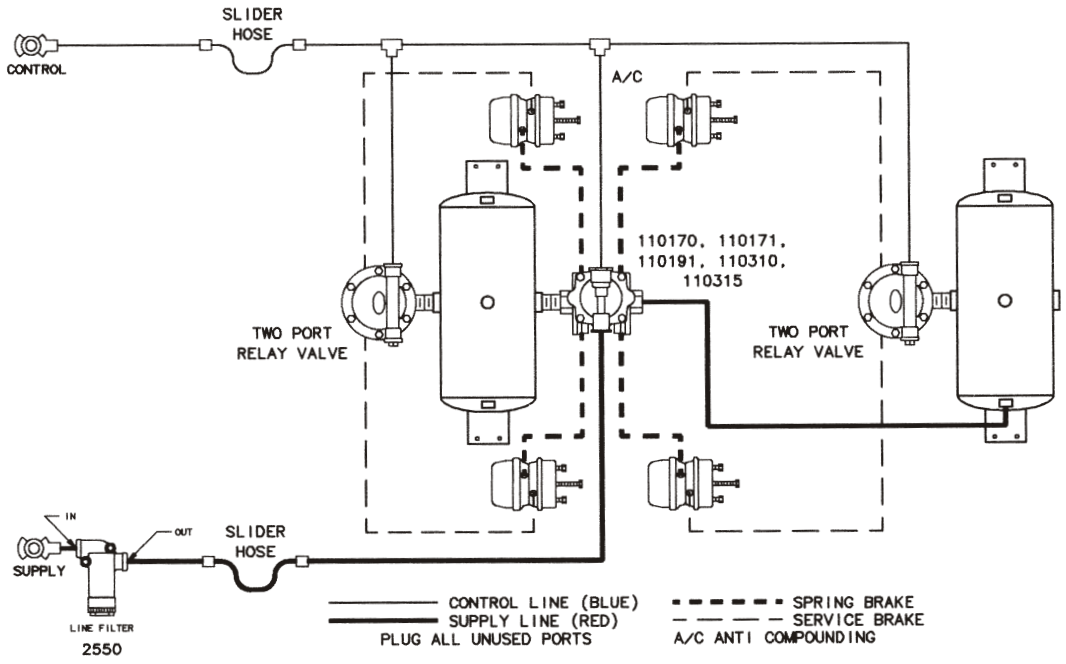

Tandem Axle Trailer (3 Tanks / 3 Valves)

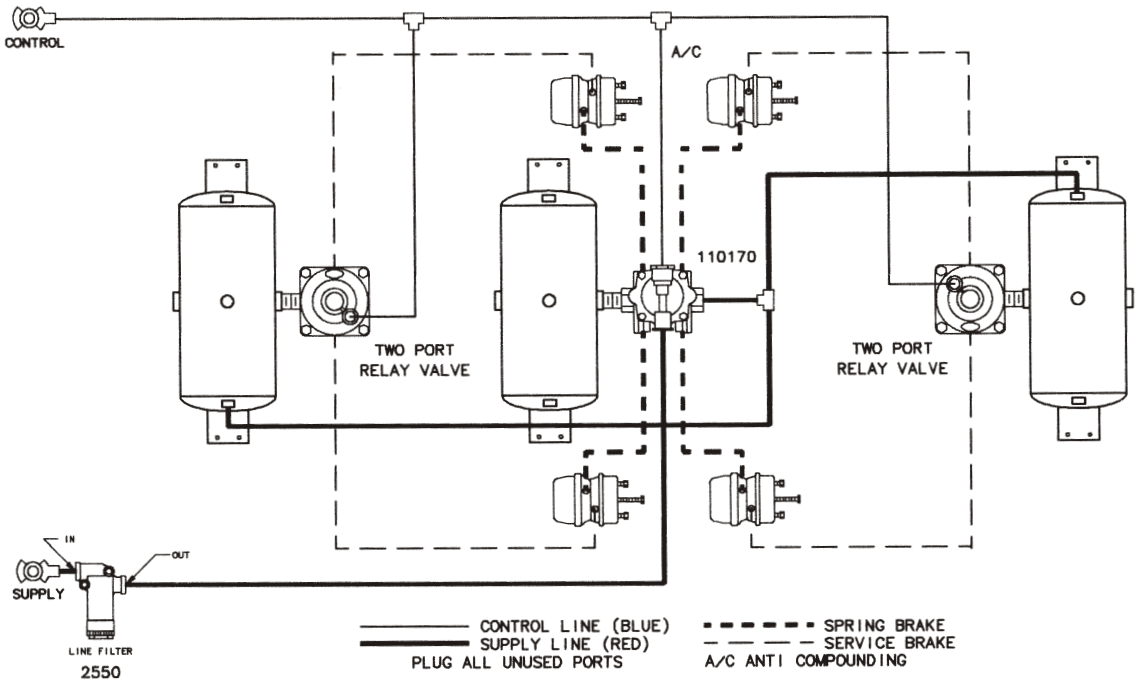

Tandem Axle Trailer
(Spring Brake Priority 110500 or 110800 / Service Reservoir Priority 110700)

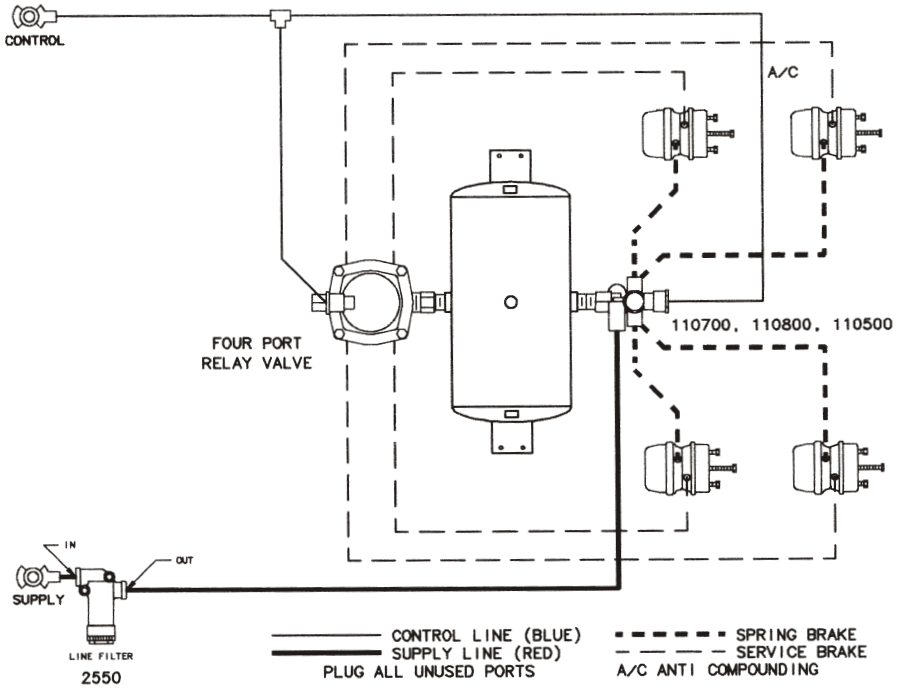

Tandem Axle Trailer (Protected Reservoir System)

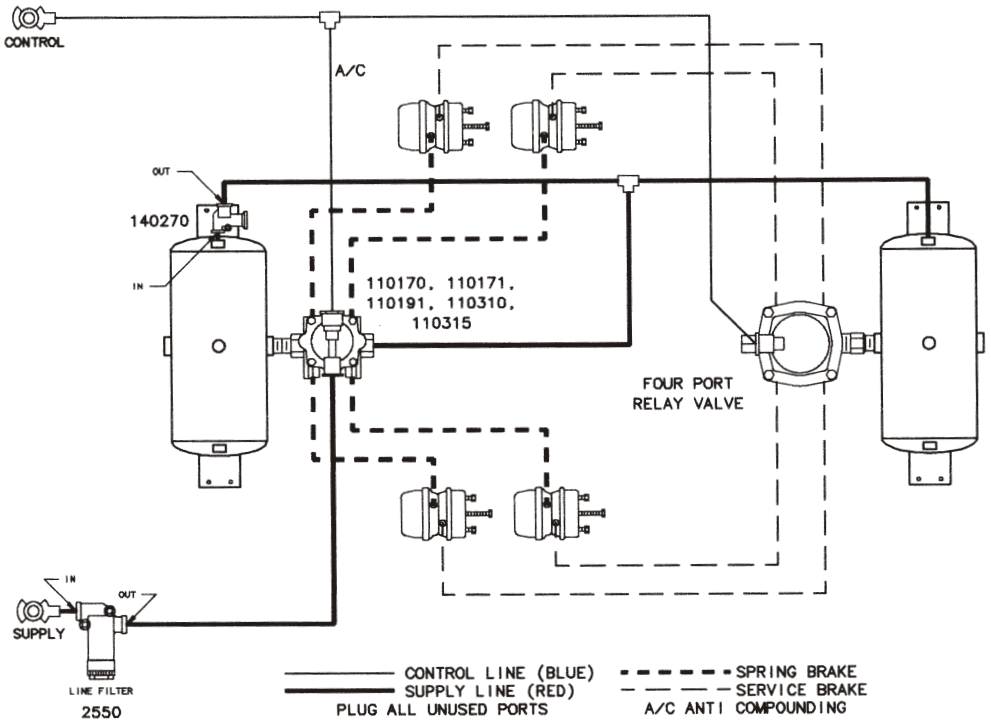

Single Axle Trailer (Double)
(Spring Brake Priority 110500 or 110800 / Service Reservoir Priority 110700)

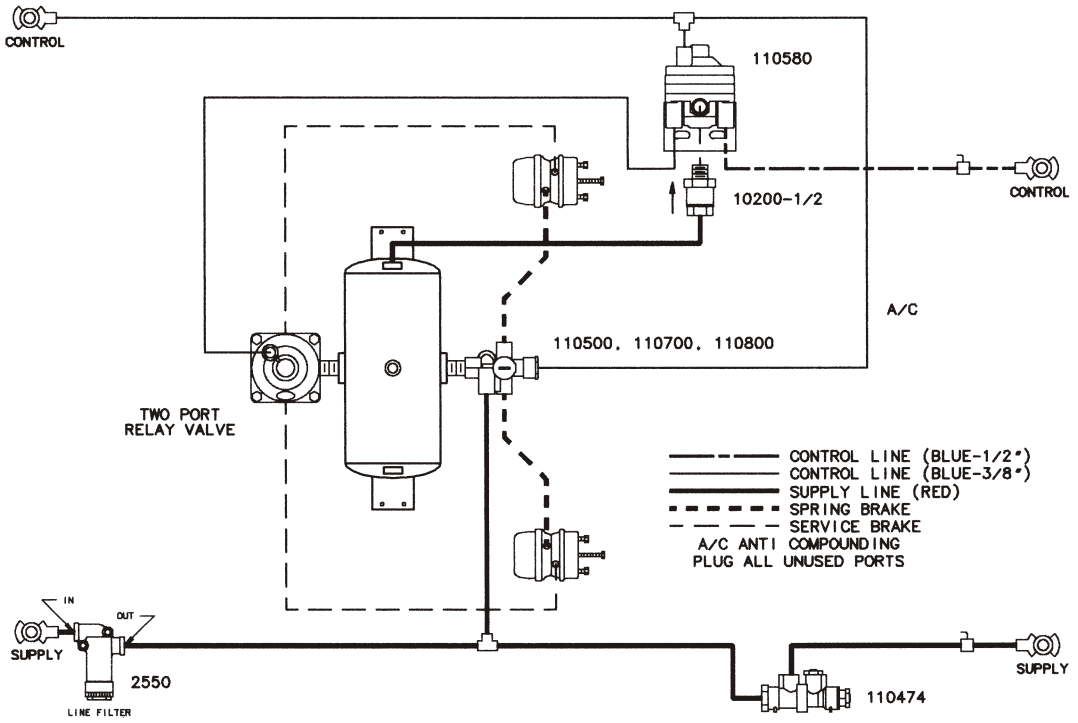

Single Axle Trailer (Double) (Protected Reservoir System)

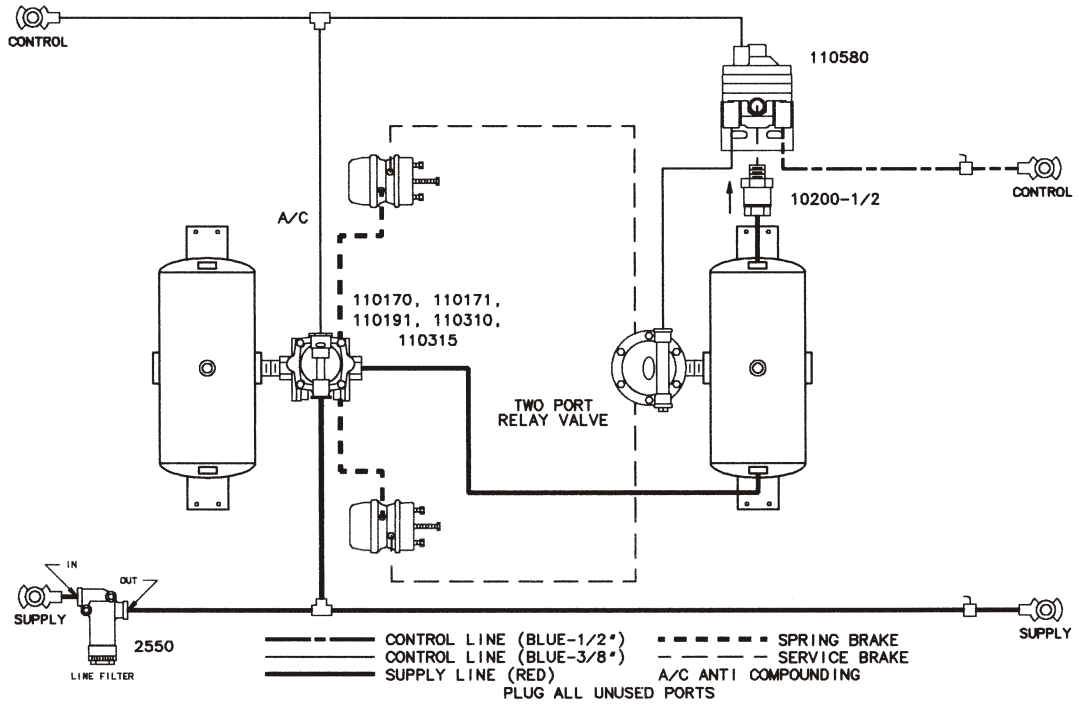

Single Axle Dolly Charging System

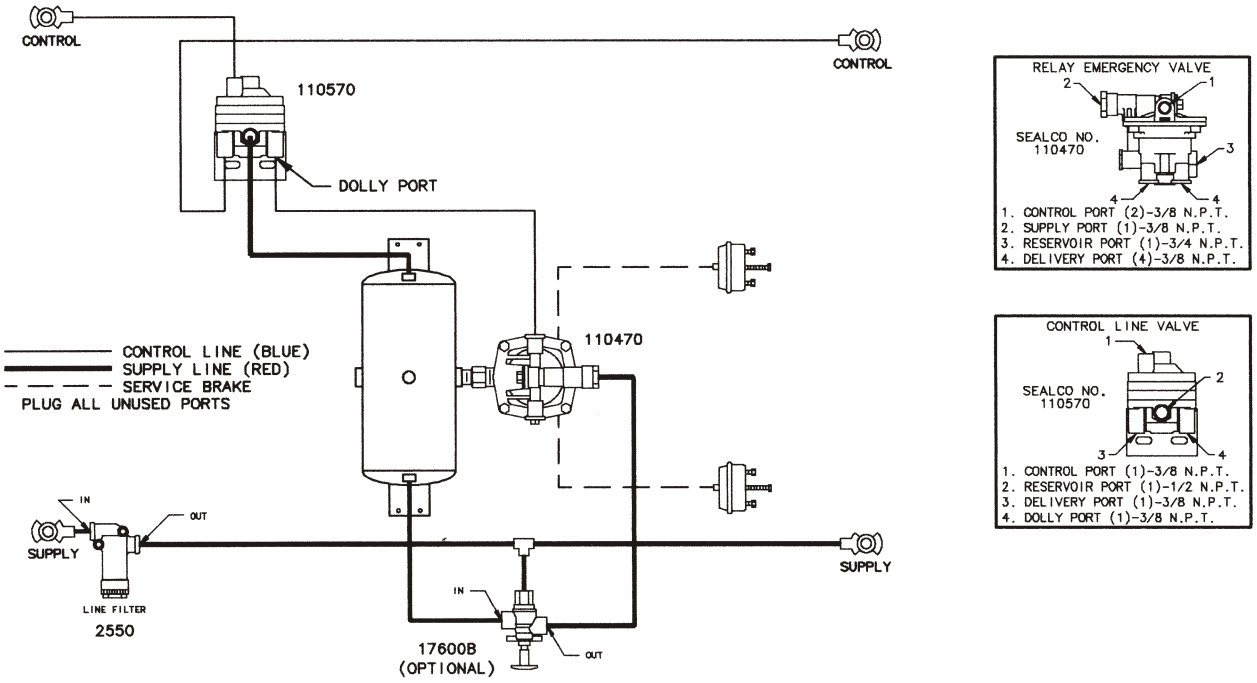

Single Axle Dolly Non-Charging System

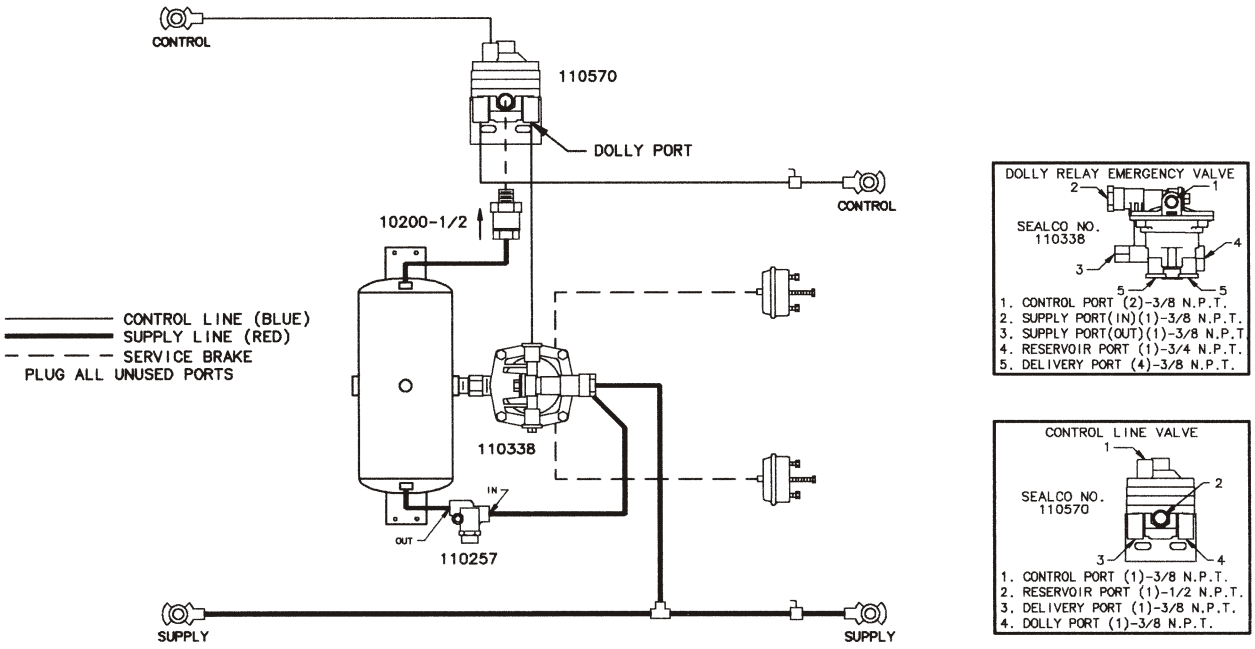

Tri Axle Trailer – ABS Exempt (2 Tanks / 3 Valves)

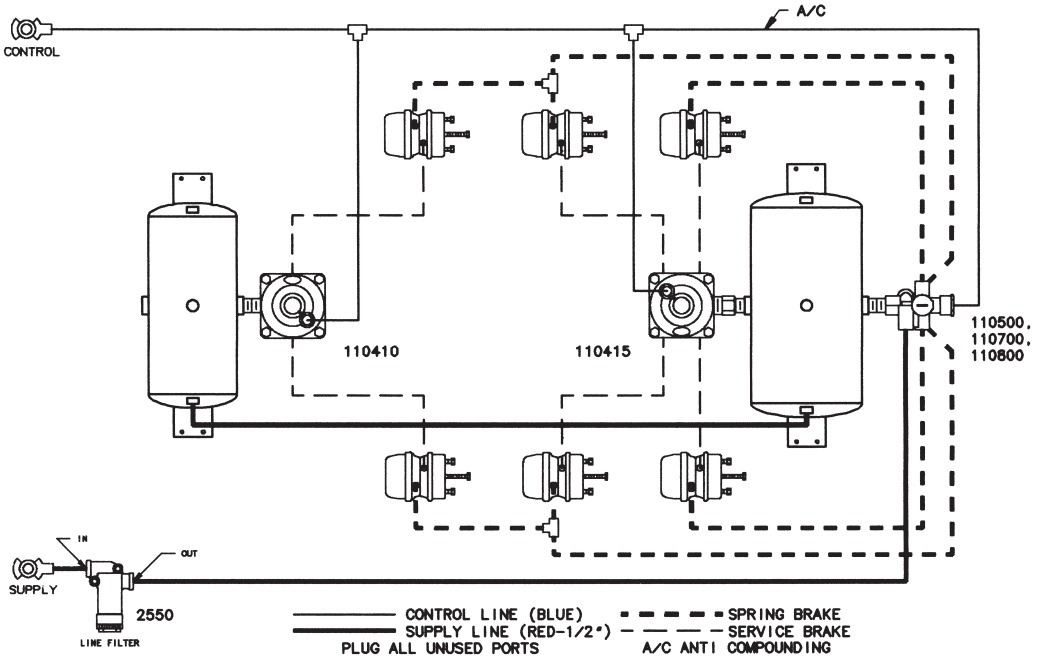

Tri Axle Trailer – ABS Exempt (2 Tanks / 2 Valves)

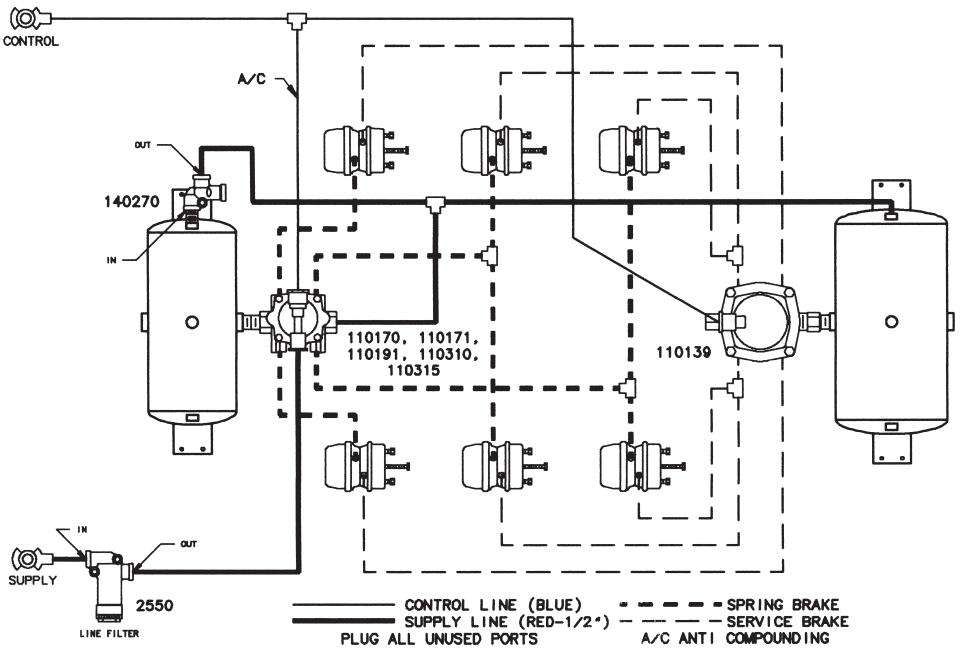

Lift Axle Trailer Application

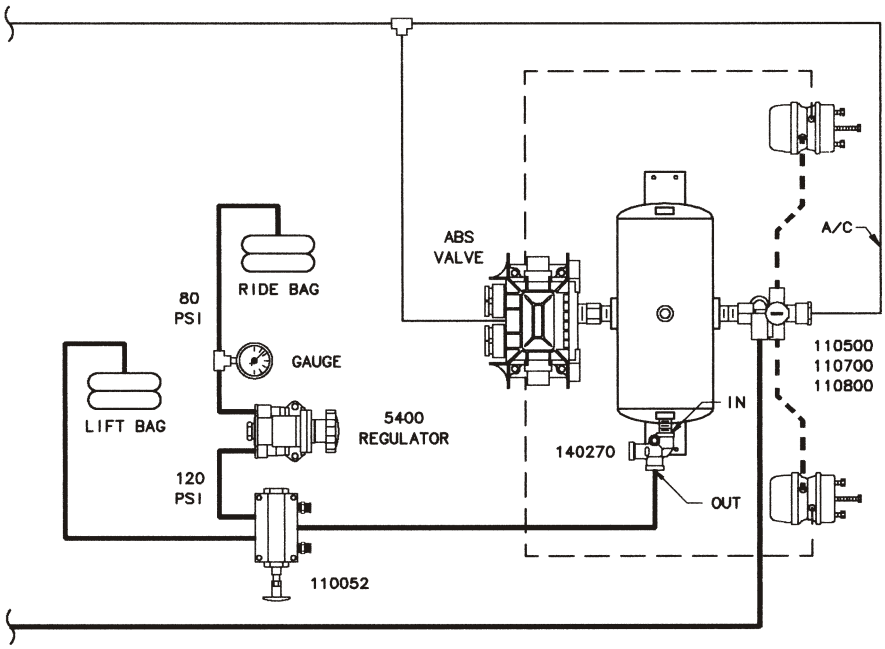

Box Locking System – Transfer Trailer

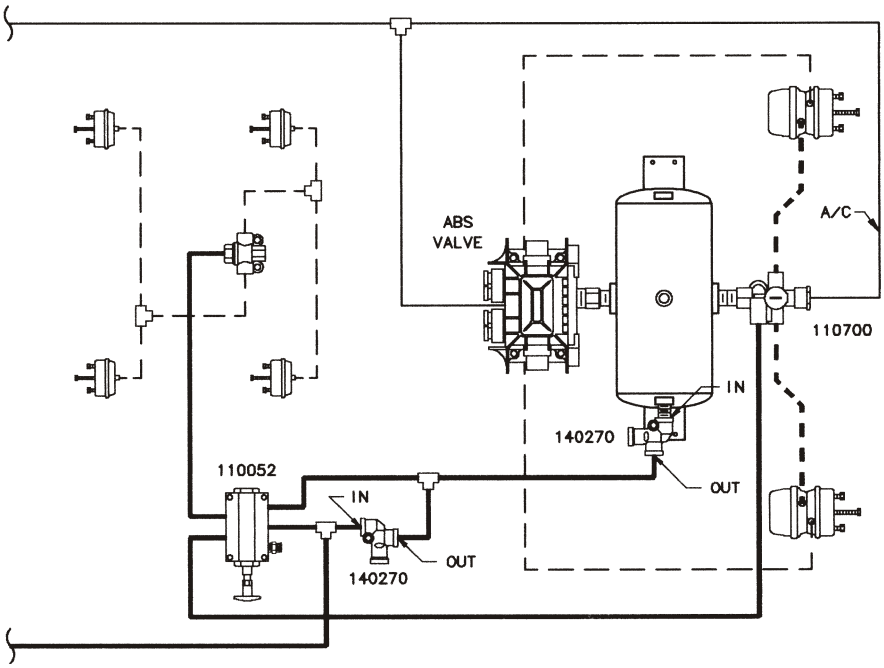

AIR SYSTEM PIPING DIAGRAMS
Fast Fill Air Suspension Valve

Bracket Mounted 110595

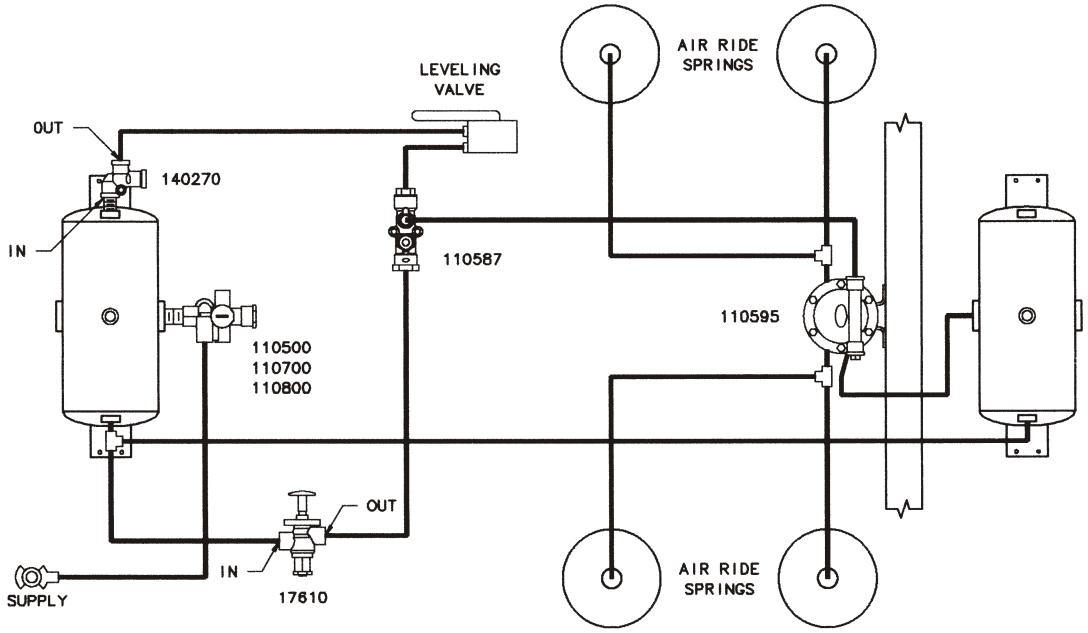

Tank / Nipple Mounted 110597

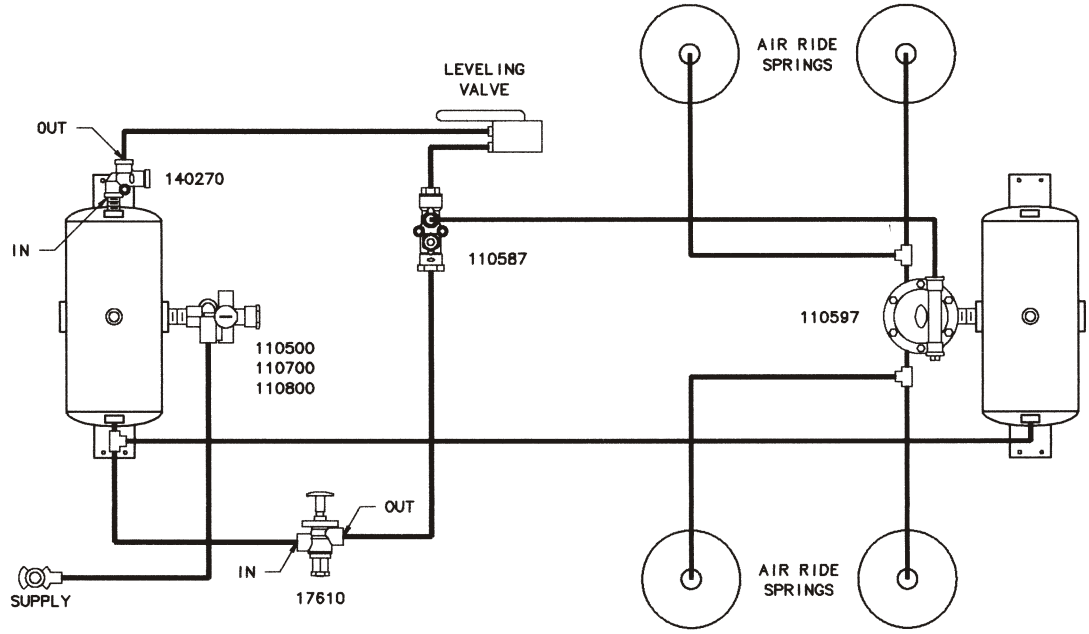

AIR SYSTEM PIPING DIAGRAMS
Conversion – Bendix SR-5 to Sealco 110800

System With Sealco 110800

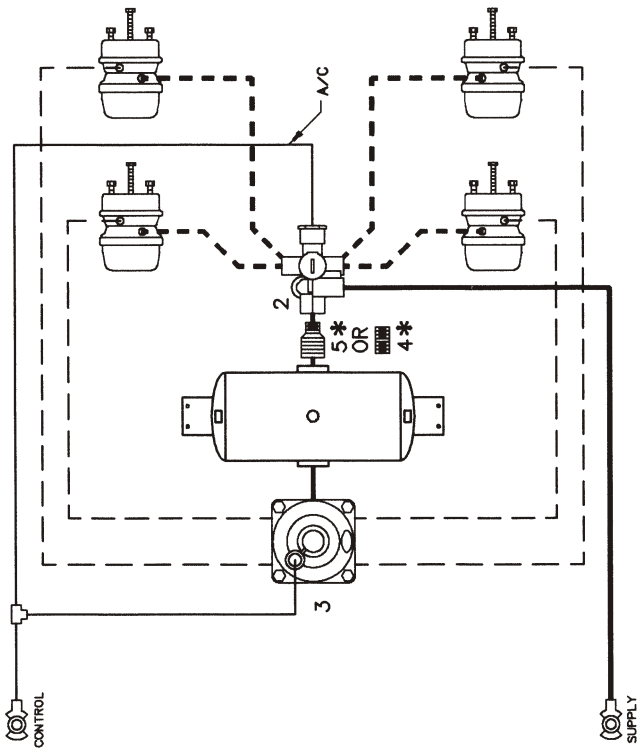

CONVERSION INSTRUCTIONS

1/ Remove Bendix SR-5 valve from reservoir & lines
2/ Connect Sealco 110800 to reservoir using nipple*
3/ Connect supply line (red) to supply port of 110800
4/ Connect control line (blue) to control port of 110800
5/ Connect deliver hoses to delivery ports of 110800
6/ Remove line (A) and plug reservoir port
* If reservoir port is ½" use Sealco 6002 nipple, if reservoir port is ¾" use Sealco 6003 nipple

System With Bendix SR-5

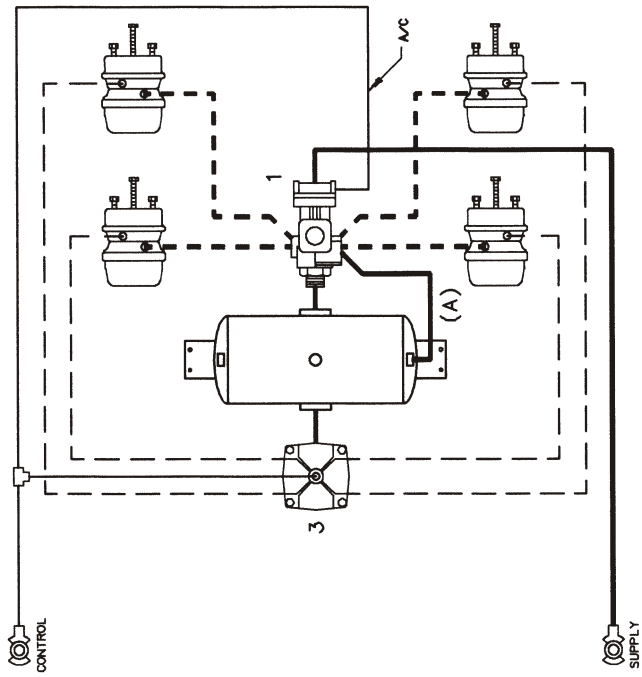

CONTROL LINE (BLUE)
SUPPLY LINE (RED)
PLUG ALL UNUSED PORTS
SPRING BRAKE
SERVICE BRAKE
A/C ANTI COMPOUNDING

NO.	DESCRIPTION
1	Bendix SR-5 Spring Brake Control Valve
2	Sealco 110800 Spring Brake Control Valve
3	Relay Valve, 4 ports
4	Sealco 6002 ½" X ½" NPT Nipple
5	Sealco 6003 ½" X ¾" NPT Nipple

AIR SYSTEM PIPING DIAGRAMS
Conversion – Sealco 110147 to Sealco 110170

System With Sealco 110170

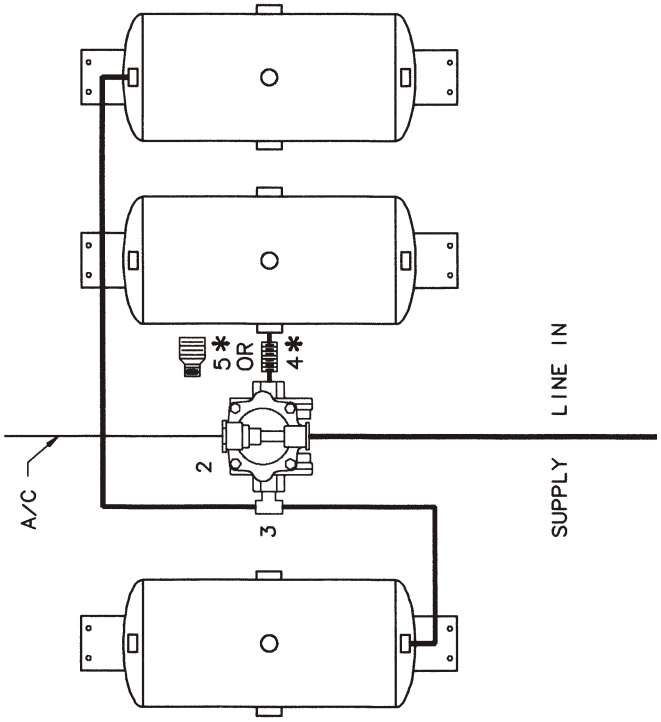

CONVERSION INSTRUCTIONS

1/ Remove Sealco 110147 valve from reservoir & lines
2/ Connect Sealco 110170 to reservoir using nipple*
3/ Connect supply line (red) to supply port of 110170
4/ Connect control line (blue) to control po rt of 110170
5/ Connect deliver hoses to delivery ports of 110170
6/ Place tee fitting in reservoir line as shown
* If reservoir port is ½" use Sealco 6002 nipple,
if reservoir port is ¾" use Sealco 6003 nipple

System With Sealco 110147

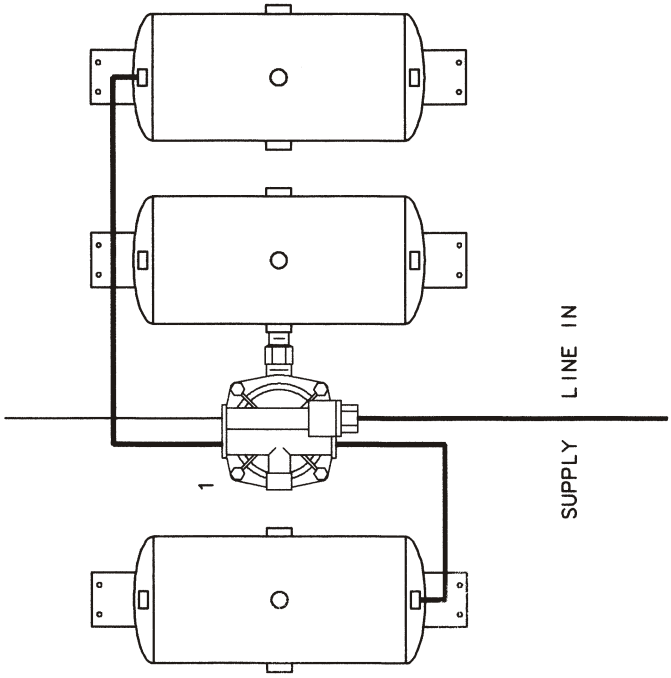

NO.	DESCRIPTION
1	Sealco 110147 Spring Brake Control Valve
2	Sealco 110170 Spring Brake Control Valve
3	Tee fitting for reservoir air line tube
4	Sealco 6002 ½" X ½" NPT Nipple
5	Sealco 6003 ½" X ¾" NPT Nipple

Anti-Compounding – An option that prevents the simultaneous application of the service brakes and emergency or parking brakes offered by some air brake system manufacturers in their spring brake control valves. This option guards against over-torque of the foundation brakes causing such problems as bent chamber push rods, broken camshafts, cracked drums, lining damage, damaged chamber brackets, etc.

Application Time – Elapsed time between the depression of the brake treadle and the delivery of 60 psi to all of the service chambers per FMVSS 121.

Charging System – An air system where the reservoir(s) is filled through a relay emergency valve (REV), not through a pressure protection valve (PPV). When the supply line is "charged" with air, the air enters the port marked "Emerg-Supply" of the REV through a one-way check valve (an integral part of the REV) and into the reservoir(s) via the reservoir port of the REV.

Control or Service Line – The air lines in the trailer air brake system that perform the normal braking of the vehicle from the tractor foot valve or hand valve. Control or service lines are commonly associated with the blue air line function of the air system. Control is a post FMVSS 121 term and service is a pre FMVSS 121 term.

Cracking Pressure – The minimum amount of air pressure (in psi) required to open an air valve.

Protected Reservoir System – A spring brake control valve (SBCV) option using integral one-way check valves for two reservoir systems that assures the loss of one reservoir will “protect” the other reservoir. Allows for the release of the parking brakes at least once after they have been applied due to the catastrophic loss of air pressure in one of the reservoirs. Simultaneously charges the reservoirs and releases the parking brakes when starting with 0 psi in the trailer air brake system.

Non-Charging System – An air system where the reservoir(s) is filled through a pressure protection valve (PPV), not the relay emergency valve (REV). When the supply line is “charged” with air, the reservoir(s) receives air. The purpose of the PPV is to close off and retain (protect) 70 psi in the supply line in the event of a catastrophic loss of reservoir air pressure while the vehicle is being towed. This prevents the spring brakes from applying or dragging on the axles with spring brake chambers in the combination vehicle.

Release Time – Elapsed time required to reduce the pressure in all service chambers from 95 psi to 5 psi per FMVSS 121.

Service Reservoir Priority – A spring brake control valve (SBCV) option where priority is given to directing supply air to fill the reservoir(s) instead of releasing the spring brakes, even though both are building pressure simultaneously. This priority prevents releasing the parking brakes after they have been applied due to a catastrophic loss of air in the reservoir(s).

Spring Brake Priority – A spring brake control valve (SBCV) option where priority is given to releasing the parking brakes instead of filling the reservoir(s). When supply line is charged with air with 0 psi in the reservoir(s), it is sent directly to the parking brakes. As the supply line pressure exceeds 80 psi, the pressure protection valve (PPV) in the SBCV opens and fills the reservoir. This priority allows for the release of the parking brakes after they have been applied due to a catastrophic loss of air pressure in the reservoir(s).

Supply or Emergency Line – The air lines in the trailer air brake system that charge the trailer air reservoir(s) and apply and release the parking or emergency brakes using the trailer push-pull valve in the tractor. Supply or emergency lines are commonly associated with the red air line function of the air system. Supply is a post FMVSS 121 term and emergency is a pre-FMVSS 121 term.

TERMINOLOGY – Valve Types

Air Bag Control Valve – Controls the inflation and deflation of trailer air suspension bags. In a manual valve, it requires manual operation to deflate or re-inflate the air bags allowing for movement of the trailer back to the dock without re-inflating the air bags. In an automatic valve, the air bags are deflated manually but are automatically re-inflated when the trailer parking brakes are released.

Check Valve (CV) – One-way check valves allow air to flow in only one direction, often protecting the air supply in a reservoir. Two-way check valves have two inlets and one outlet allowing airflow from the highest pressure input only thereby blocking airflow from the lower pressure inlet.

Control Line Valve (CLV) – A low or zero crack pressure relay valve used to speed up the control line signal. Commonly used on trailers designed to tow another trailer and long wheelbase sliding tandem non-towing trailers. The CLV fills the downstream control line faster on application and exhausts the air from the downstream control line faster on release. The CLV is used to meet FMVSS 121 brake application and release timing requirements and achieve uniform brake balance in the multi-axle combination vehicle.

Dolly Control Line Valve (DCLV) – Similar to a standard control line valve with the addition of a port marked "Dolly Port" which applies and releases the control line signal of air to the relay valve on the steerable axle. The unmarked delivery port of the DCLV applies and releases the control line signal of air to the downstream service relay valves. Commonly used on converter dollies and turntable axles on pull, transfer and train-type trailers.

Emergency Control Valve – Fills the reservoir(s) with air and takes the service chambers in and out of emergency working with a SRV or ABS relay valve. Commonly used on converter dollies, turnable axles and trailers exempt from spring brakes.

Line Filter – Reduces the amount of supply line contamination when used in the trailer supply line ahead of the SBCV or REV thereby extending the useful life of other air valves in the system.

Pressure Protection Valve (PPV) – Protects upstream air source in the event of a downstream failure. Closes to retain the supply line pressure above a specified setting, usually 70 psi, in the event of a single source failure such as a reservoir. Often built into a spring brake control valve (SBCV).

Quick Release Valve (QRV) – Provides high capacity exhaust flow capabilities and is usually mounted near the device being exhausted. Commonly used for brake chambers and suspension air bags.

Relay Emergency Valve (REV) – Charges the reservoir(s) with air, applies & releases the normal service brakes and applies & releases emergency brakes. Used with service chambers only on converter dollies, trailer turntable axles, liftable axles, pre FMVSS 121 trailers or trailers exempt from spring brakes under FMVSS 121.

Service Relay Valve (SRV) – Relays air from the reservoir to the brake chambers performing the normal braking function upon receiving a signal from the foot valve, hand valve or control line valve (CLV). Used on post FMVSS 121 trailers with spring brake chambers.

Spring Brake Control Valve (SBCV) – Charges the trailer reservoir(s) with air, applies & releases the parking brakes and applies the emergency brakes if a catastrophic loss of supply line pressure occurs. Determines the priority of air delivery when supply line air is applied based upon the design of the SBCV (see Protected Reservoir System, Spring Brake Priority & Service Reservoir Priority on preceding page). Used on post FMVSS 121 trailers with spring brake chambers, SBCVs combine a quick release valve (QRV), pressure protection valve (PPV) and, in all Sealco SBCVs, a one-way check valve (CV) for anti-compounding. The SBCV is operated by the trailer push-pull valve in the tractor.

Qualifications - Sealco Distributors must represent our entire valve product line and maintain an adequate inventory of Sealco products. The quantities and specific products to be included in an initial order for a Distributor and/or its branch locations must meet minimum stocking levels as determined by Sealco's Regional Manager and approved by Sealco. Sealco Distributors are required to supply only Genuine Factory Remanufactured Sealco products and are specifically prohibited from supplying any Sealco products manufactured or rebuilt by another company.

Terms - Our terms are Net 30 Days with a minimum invoice amount of twenty dollars ($20.00). All new Distributor customers are required to submit a written credit application to Sealco for approval prior to acceptance of order and will be assigned an individual customer account number upon approval.

Territories - Sealco does not assign or recognize exclusive sales territories for its Distributor customers. Our arrangements with original equipment manufacturers make it necessary that we be able to supply their factory owned branches and/or dealers either directly or through a parent company parts department. While Sealco favors a limited distribution network, the actual number of Distributors in any geographical area may change from time to time, at the sole discretion of Sealco, in order to provide adequate market coverage.

Shipments - Sealco will pay surface freight on outbound shipments of $1,000. or more of Sealco air valve products, excluding core charges, in the continental United States. Sealco reserves the right to select the carrier on all prepaid shipments. Where the customer designates a specific carrier on a prepaid order, shipment will be made freight collect with an allowance made for freight at Sealco's regular freight rates.

Returns - All requests for returns must be made in writing to Sealco and authorized by the issuance of a Returned Goods Authorization (RGA) number. All returned valves must be in salable condition. A return charge will be assessed on valves less than 1 year old at 15%, 1 to 2 years old at 25% and 2 to 3 years old at 50%. Valves over 3 years old, small parts, rubber goods, repair kits, obsolete items, etc. are not returnable. The age of the returned valve is calculated from the date of manufacture to the date received in our Phoenix facility. Returns will only be credited to an offsetting order of equal or greater value. Sealco will determine the value of the returned items and notify the customer in order to place the offsetting order. All merchandise being returned must be shipped to our Phoenix facility via prepaid freight within 30 days of its authorization. Unauthorized and/or freight collect returns will not be accepted.

Remanufactured Valves - All Sealco air valves are available as new. Certain valves are available as Genuine Factory Remanufactured and are indicated by an "X" at the end of their part number. Remanufactured valves ordered on an exchange basis will be billed at the exchange price plus a core charge, which is shown separately on the invoice.

Core Returns - Cores will be accepted for credit up to 4 months before or after the invoice date of a remanufactured valve order. Once a core is received at Sealco it is processed and is no longer physically available. Cores returned in excess of the number of remanufactured valves purchased will have their potential credit held in a core bank for 4 months after their receipt and credited against subsequent core charges. Any potential credits remaining in the core bank past the 4 month period without an offsetting order will be automatically deleted. All Sealco valves that are available as remanufactured are acceptable for core credit. Unacceptable cores will be scrapped upon receipt.

Core Freight – For core returns of 100 lbs. or more, please call Meridian I.Q. at (800) 320-2054 to arrange for shipment & Sealco will pay the freight charges within the continental U.S. Core returns under 100 lbs. must be shipped prepaid to either our Arizona or Indiana facilities dependent upon your location. If you are unsure which facility to ship to please contact our office. Sealco will not accept freight collect shipments.

WARRANTY

Sealco Commercial Vehicle Products, Inc. (Sealco) warrants to the Purchaser that Sealco air valves will be free from defects in workmanship and material under normal use and service for twenty-four (24) months from the manufacture date of the valve. Sealco will, at its option, either repair, replace or credit the net purchase price of any Sealco air valve that they find defective upon inspection. All air valves involved in warranty requests must be returned for inspection with a Return Goods Authorization (RGA) number, shipment prepaid and separate from any other items including cores, to Sealco Commercial Vehicle Products, 215 East Watkins Street, Phoenix, Arizona 85004, Attention: Warranty Department. All decisions made by Sealco concerning warranty issues are final.

This warranty shall not apply to any air Sealco valve which: 1) has been employed in other than normal use or service, 2) has not been properly maintained, 3) has been altered, repaired or replaced in a harmful or unauthorized manner, 4) has been rebuilt by someone other than Sealco, 5) has been subjected to misuse, negligence, accident or mechanical damage including, but not limited to, the use of additives in the air brake system or 6) has suffered impact or shock greater than that ordinarily encountered in the service for which the valve was designed or intended. The alteration, repair or replacement by Sealco of an air valve for any reason will not extend this warranty. Genuine Sealco fact ory remanufactured valves will carry the same warranty as new Sealco valves.

There is no other warranty or liability, expressed or implied, applicable to Sealco valves and in no event shall Sealco be liable for any consequential or special damages resulting from the use of Sealco valves.

CAUTION!

THE USE OF ADDITIVES IN THE AIR BRAKE SYSTEM IS NOT RECOMMENDED AS THEY CAN BE HARMFUL TO THE PERFORMANCEOF THE AIR BRAKE VALVES

INDEX - Numerical Listing

Part Number	Page	Part Number	Page	Part Number	Page	Part Number	Page
616	61	102001	33	110376	3	110595	39
617	61	102002	33	110380	5	110597	39
A1000S	4	110052	43	110385	5	110600	6
1000-5A	4	110103	23	110390	50	110601	55
1300 Series	32	110114	19	110395	62	110605	16
1500	58	110127	55	110399	55	110606	15
2000 Series	46	110128	57	110400 Series	48	110615	5
2200 Series	33	110129	57	110410	8	110627	55
2550	42	110130	57	110412	8	110644	19
3100	18	110131	57	110413	24	110657	30
3200 Series	34	110139	6	110415	5	110690	15
3450G	23	110158	62	110416	5	110700	13
3450S	23	110167	24	110436	27	110742	10
3800	47	110170	14	110488	5	110744	10
5200	34	110171	14	110450	6	110760	20
5400	25	110183	56	110459	1	110790	16
5900 Series	27	110189	21	110460	1	110800	12
6002	61	110191	14	110470	1	110842	10
6003	61	110197	9	110474	31	110844	10
6006	61	110198	9	110475	1	140200	28
6010	61	110199	9	110486	51	140270	28
6011	61	110200	1	110487	8	140280	28
6012	61	110205	1	110500	11	140290	28
6125 Series	49	110207	7	110505	11	140300	28
6300	60	110221	21	110507	9	140370	28
6900	52	110228	7	110510	11	140380	28
7200	35	110238	61	110512	20	140390	28
7700	59	110250	50	110514	19	200000 Series	46
7800	47	110252	20	110516	27	216050	24
8000 Series	53	110257	29	110527	55	216100	24
8100 Series	54	110258	30	110542	10	216200	24
9125	7	110274	19	110544	10	220000	56
9400	26	110275	9	110555	38	220100	56
10200 Series	33	110284	19	110570	15	320100	35
10900	50	110285	61	110571	15	340250	23
11900	51	110300	24	110575	6	340350	23
14900	51	110301	24	110576	45	342501	23
17600 Series	19&20	110310	14	110580	16	342502	23
17610	37	110314	62	110582	16	780210	47
17630	44	110315	14	110584	6	780212	62
21600 Series	24	110338	2	110587	40	780219	47
A25600 Series	22	110360	8	110588	16	940000	26
99600 Series	21	110365	8&17	110591	41	996555	36

If Part number is not found in Index, please refer to Obsolete/Superceded Part Numbers on page 71